SHELBY COUNTY COMMISSION
SHELBY COUNTY, ALABAMA

TALLADEGA/SHELBY WTP BUILDING IMPROVEMENTS

INDEX

SHEET	TITLE
0	TITLE PAGE
1	LOCATION MAP
2	PROJECT LEGEND, ABBREVIATIONS, SYMBOLS, ETC.
3	NOTES
4	EXISTING WTP SITE PLAN
5	ELEVATIONS
6	ELEVATIONS
7	ELEVATIONS
8	ELEVATIONS
9	ELEVATIONS
10	ELEVATIONS
11	ELEVATIONS
12	STORAGE FLOOR PLAN
13	CHEMICAL FLOOR PLAN
14	LAB, ELECTRICAL ROOM, SOFTNER, & FILTER BASIN FLOOR PLAN
15	SECTIONS
16	SECTIONS
17	SECTIONS
18	SECTIONS
19	SECTIONS
20	OPENING ENCLOSURE FRAMING DETAILS
21	ROLL-UP DOOR SCHEDULE AND DETAILS
22	EXHAUST FAN SCHEDULE AND DETAILS
23	LOUVER SCHEDULE AND DETAILS
24	SINGLE DOOR SCHEDULE AND DETAILS
25	BARREL ELEVATOR COVER DETAILS
26	SHEAR WALL DETAILS
27	EXISTING WALL FRAMING REPLACEMENT CHART
28	METAL ROOFING AND SIDING DETAILS
29	METAL TRIM DETAILS
30	MEMBRANE ROOF DETAILS
31	MEMBRANE ROOF DETAILS
32	ELECTRICAL NOTES, LEGEND, & DETAILS
33	STORAGE FLOOR ELECTRICAL & LIGHTING PLAN
34	CHEMICAL FLOOR ELECTRICAL, LIGHTING, & UNIT HEATER PLAN
35	FILTER BUILDING ELECTRICAL & LIGHTING PLAN

JUNE 2020

Municipal Consultants, Inc. **Birmingham, Alabama**

06/26/20

BID SET

COPYRIGHT © MUNICIPAL CONSULTANTS, INC.

ALABAMA MAP

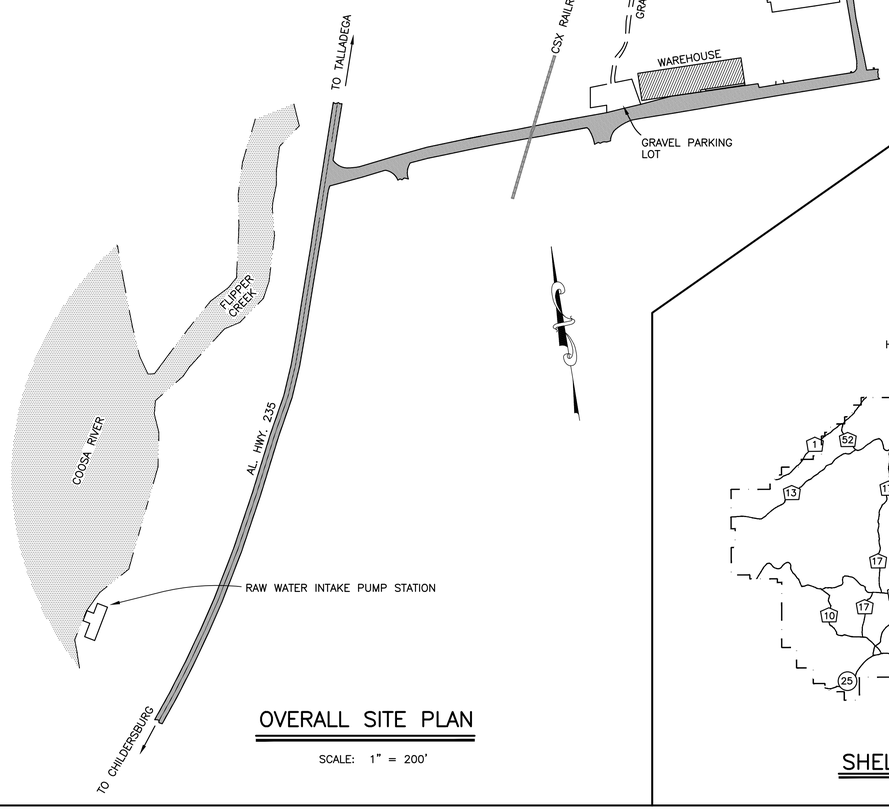

OVERALL SITE PLAN

SCALE: 1" = 200'

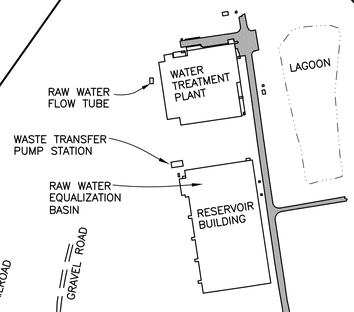

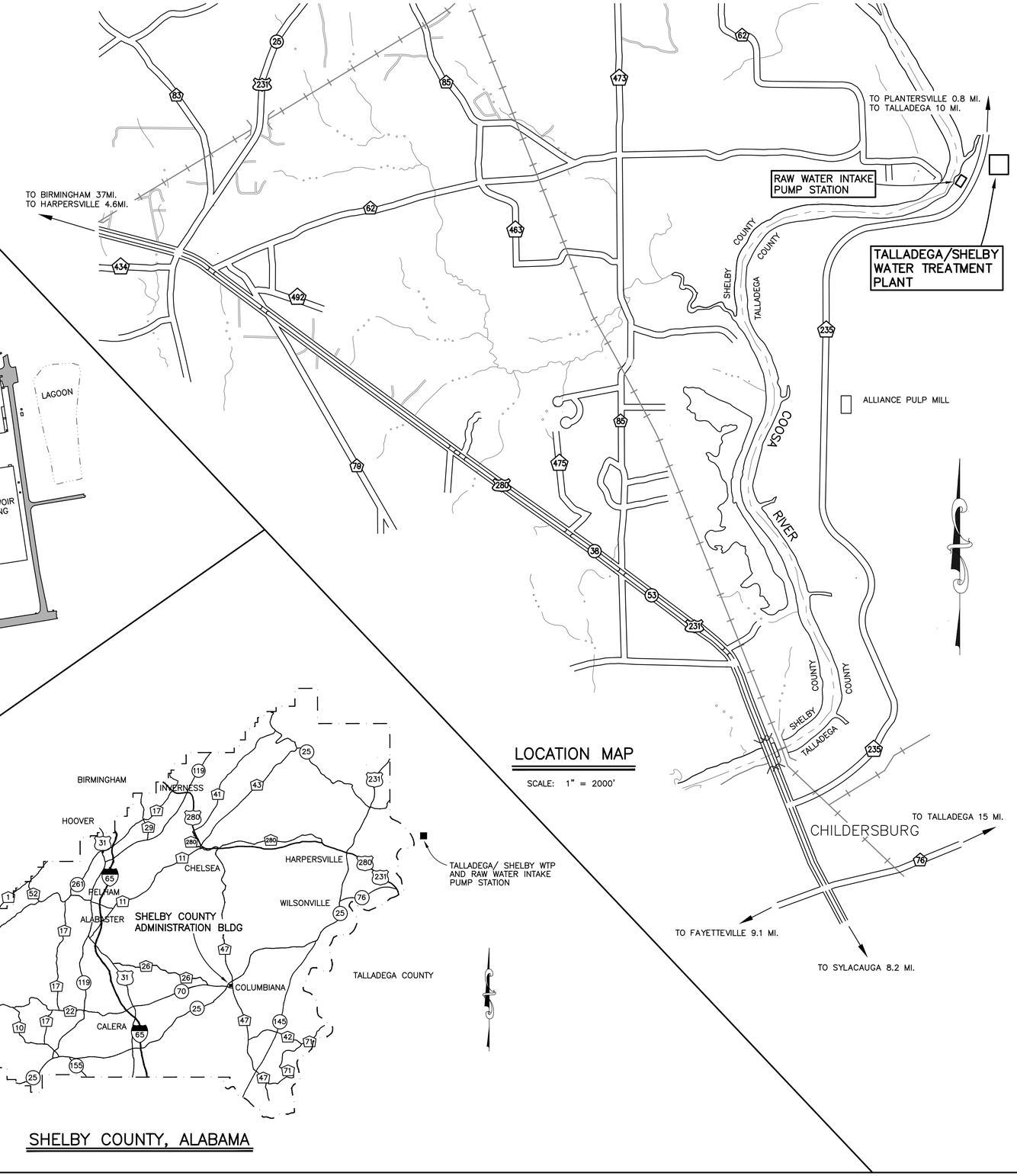

LOCATION MAP

SCALE: 1" = 2000'

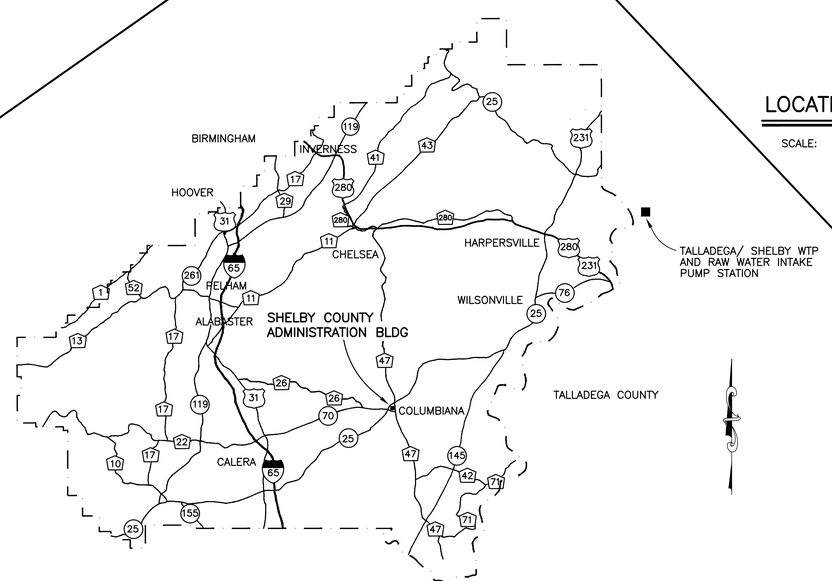

SHELBY COUNTY, ALABAMA

Municipal Consultants, Inc.
200 Century Park South, Suite 212
Birmingham, Alabama 35226
(205) 822-0387

SHELBY COUNTY COMMISSION

TALLADEGA/SHELBY WTP
BUILDING IMPROVEMENTS

2020

ALABAMA LICENSED PROFESSIONAL ENGINEER NO. 23366 MICHAEL S. COLE
06/26/20
NOT VALID WITHOUT SIGNATURE

BAR = 1"

Title	LOCATION MAP
Drawing	
Project No.	
Date	6-2020
Scale	AS SHOWN
Sheet	1
	BID SET

COPYRIGHT © MUNICIPAL CONSULTANTS, INC.

SYMBOLS

PROPOSED ASPHALT ROAD OR DRIVE

EXISTING ASPHALT ROAD OR DRIVE

EXISTING ASPHALT PAVING TO BE REMOVED AND REPLACED

PAVED ROAD WITH CURB AND GUTTER (DRAINAGE INLET SHOWN)

EXISTING CONCRETE

PROPOSED CONCRETE ROAD OR DRIVE

GRAVEL

DEMOLITION & DISPOSAL

PROPOSED FIRE HYDRANT

EXISTING FIRE HYDRANT

EXISTING VALVE

PROPOSED VALVE

SEWER MANHOLE

POWER POLE

LAMP POST

GRATE INLET

HEADWALL WITH WING WALLS

SLOPE PAVED HEADWALL

UTILITY MANHOLE (TYPE T = TELEPHONE)
(TYPE E = ELECTRICAL)

EXISTING BUILDING & STRUCTURES

PROPOSED UNDERGROUND ELECTRIC — UE

EXISTING UNDERGROUND ELECTRIC — UE

OVERHEAD ELECTRIC — OE

GAS MAIN — G

SANITARY SEWER (GRAVITY) — SS

SANITARY SEWER (FORCE MAIN) — FM

PROCESS MAIN — PM

RAW WATER — RW

WATER MAIN — WM

WATER LINE

PROPOSED FENCE (NOTE TYPE)

EXISTING FENCE (NOTE TYPE)

STORM DRAIN

BRIDGE

EXISTING MINOR CONTOUR — 442

EXISTING MAJOR CONTOUR — 440

PROPOSED MINOR CONTOUR — 442

PROPOSED MAJOR CONTOUR — 440

DRAINAGE CREEK

STREAM (ARROW INDICATES FLOW)

INTERMITTENT DITCH OR STREAM

WOODED AREA

LOT DIMENSIONS — 110'

PROPERTY LINE — PL

PROPERTY CORNER

RIGHT-OF-WAY LINE — ROW

PERMANENT EASEMENT BOUNDARY — E

TEMPORARY CONSTRUCTION EASEMENT BOUNDARY — CE

SOIL BORING HOLE (NUMBER) — #1

TRAFFIC/STREET SIGN

GUY WIRE ANCHOR

SWAMP OR MARSH

FLUME — FLUME

CLEANOUT

UNDERGROUND TELEPHONE — UT

UNDERGROUND CABLE TV — TV

TELEPHONE PEDESTAL

STEEL ENCASED PIPE

BLOW-OFF VALVE

AIR RELEASE VALVE — AR

SERVICE INSTALLATION

REDUCER/INCREASER

PLUG (W/ STANDARD BRACING)

MATCH LINE

CHEMICAL LINE — CH

FLOW ARROWS

RAILROAD

SURVEY STATION

SECTION AND DETAIL MARKS

SECTION REFERENCE BETWEEN PAGES — A / 15 — SHEET ON WHICH SECTION APPEARS OR IS FROM

SECTION REFERENCE SAME PAGE — A

DETAIL MARK BETWEEN PAGES — A / 15 — SHEET ON WHICH SECTION APPEARS OR IS FROM

DETAIL MARK SAME PAGE — A

NOTE: DETAILS ALSO REFERENCED BY NAME OR IDENTIFYING MARK SUCH AS "TYPICAL OR "TYP"

@	AT
ADMIN	ADMINISTRATION
ADOT, ALDOT	ALABAMA DEPT. OF TRANSPORTATION
AFF	ABOVE FINISHED FLOOR
AL, ALUM	ALUMINUM
APCO	ALABAMA POWER COMPANY
APPROX	APPROXIMATE
ASSY	ASSEMBLY
AVG	AVERAGE
AVE	AVENUE
AWWA	AMERICAN WATER WORKS ASSOCIATION
BFV	BUTTERFLY VALVE
BLDG	BUILDING
BLK	BLOCK
BM	BENCHMARK
BOD	BIOCHEMICAL OXYGEN DEMAND
BOT, BTM	BOTTOM
BS	BOTH SIDES
CB	CIRCUIT BREAKER
CB	CATCH BASIN
CCP	CONCRETE CULVERT PIPE
CI	CAST IRON
CIP	CAST IRON PIPE
CJ	CONSTRUCTION JOINT
CL2, C	CHLORINE
CL, ℄	CENTER LINE
CL	CLASS
CLR	CLEAR
CMU	CONCRETE MASONRY UNIT'
COL	COLUMN
CONC	CONCRETE
CONN	CONNECTION
CONT	CONTINUOUS
CTS	CURRENT TRANSFORMERS
CU YD	CUBIC YARD
CV	CHECK VALVE
CW	COLD WATER
D	DOOR
DIA	DIAMETER
DI, D.I.	DUCTILE IRON
DIP	DUCTILE IRON PIPE
DIFF	DIFFUSER
DWN	DOWN
DWG	DRAWING
E	EAST, EXHAUSTER
EA	EACH
EF	EACH FACE
ELEC	ELECTRICAL
EL, ELEV	ELEVATION
EQ	EQUAL
ETC	ET CETERA
EW	EACH WAY, EFFLUENT WATER
EX	EXISTING
EXIST	EXISTING
EXP	EXPANSION
EXT	EXTINGUISHER
FCA	FLANGED COUPLING ADAPTER
FH	FIRE HYDRANT
FIG	FIGURE
FFE	FINISH FLOOR ELEVATION
FIN GR	FINISH GRADE
℄	FLOW LINE
FL, FLG	FLANGED
FM	FORCE MAIN
FPM	FEET PER MINUTE
FT	FOOT
FTG	FOOTING
GA	GAUGE, GAGE
GAC	GRANULAR ACTIVATED CARBON
GAL	GALLON(S)
GALV	GALVANIZED
GFI	GROUND FAULT INDICATOR
GL	GAS LINE
GND	GROUND
GPD	GALLONS PER DAY
GPM	GALLONS PER MINUTE
GR	GRADE
GV	GATE VALVE
H,HGT,HT	HEIGHT
HCJ	HORIZONTAL CONSTRUCTION JOINT
HD	HOT DIPPED
HORIZ	HORIZONTAL
HP	HORSEPOWER
HR	HOUR
H.S.	HIGH SERVICE
HW	HOT WATER
HWL	HIGH WATER LEVEL
HWY	HIGHWAY
HZ	HERTZ
ID	INSIDE DIAMETER
IF	INSIDE FACE
IN	INCHES
INV	INVERT
JT	JOINT
KCF	THOUSAND CUBIC FEET
L	LOUVER
LAR	LENGTH AS REQUIRED
LB	POUND
LEN	LEFT
LIN	LINEAL, LINEAR
LG	LONG
LOC	LOCATION
LT	LEFT
LWL	LOW WATER LEVEL
MFR	MANUFACTURER
MAX	MAXIMUM
MC	MOTOR CONTROL
MCC	MOTOR CONTROL CENTER
MGD	MILLION GALLONS PER DAY
MH	MANHOLE
MIN	MINIMUM
MISC	MISCELLANEOUS
MJ	MECHANICAL JOINT
MLSS	MIXED LIQUOR SUSPENDED SOLIDS
N	NORTH
NIC	NOT IN CONTRACT
NO.,#	NUMBER
NOM	NOMINAL
NORM	NORMAL
NPW	NON POTABLE WATER
NTS	NOT TO SCALE
NWL	NORMAL WATER LEVEL
OC	ON CENTER
OD	OUTSIDE DIAMETER
OF	OUTSIDE FACE
OZ	OUNCE
PE	PLAIN END
PEJ	PIPE EXPANSION JOINT
PH	PHASE
PI	POINT OF INTERSECTION
PL, PLS	PLACES
PL	PLATE
PO	PUSH ON
PP	POWER POLE
PPD	POUNDS PER DAY
PRESS	PRESSURE
PRV	PRESSURE REDUCING VALVE
PSI	POUNDS PER SQUARE INCH
PTS	POTENTIAL TRANSFORMERS
PV	PLUG VALVE
PVC	POLYVINYL CHLORIDE
RAS	RETURN ACTIVATED SLUDGE
R,RAD	RADIUS
RCP	REINFORCED CONCRETE PIPE
RED	REDUCER
REINF	REINFORCING
REQ'D	REQUIRED
RJ, R.J.	RESTRAINED JOINT
ROW, R/W	RIGHT-OF-WAY
RT	RIGHT
S	SOUTH, SLUDGE
SCFM	STANDARD CUBIC FEET PER MINUTE
SCH	SCHEDULE
SCJ	SLAB CONSTRUCTION JOINT
SECT	SECTION
SF	SQUARE FEET
SHT	SHEET
SIM	SIMILAR
SL	SURVEY LINE
SP	STATIC PRESSURE
SPD	STANDARD PROXY DENSITY
SPECS	SPECIFICATIONS
SQ	SQUARE
SRT	SOLIDS RETENTION TIME
SS	SANITARY SEWER
ST	STREET, STORMWATER
STA	STATION
STD	STANDARD
ST STL,SS	STAINLESS STEEL
SWD	SIDE WATER DEPTH
T&B	TOP AND BOTTOM
TBM	TEMPORARY BENCHMARK
TEMP	TEMPORARY, TEMPERED
THK	THICKNESS
TL	TRANSFER LINE
TOC	TOP OF CURB
TOW	TOP OF WALL
TYP	TYPICAL
TVSS	TRANSIENT VOLTAGE SURGE SUPPRESSION
UH	UNIT HEATER
V	VALVE, VENTILATOR, VOLTS
VC	VITRIFIED CLAY
VERT	VERTICAL
VICT	VICTAULIC
VT	VENTILATOR
W	WEST, WIDTH, WINDOW, WATER
W/	WITH
W/O	WITHOUT
WAS	WASTE ACTIVATED SLUDGE
WL	WATER LINE
WS	WATERSTOP
WTM	WATER TRANSMISSION MAIN
WWF	WELDED WIRE FABRIC
WTP	WATER TREATMENT PLANT
WWTP	WASTEWATER TREATMENT PLANT
X	BY

Municipal Consultants, Inc.
200 Century Park South, Suite 212
Birmingham, Alabama 35226
(205) 822-0387

SHELBY COUNTY COMMISSION

TALLADEGA/SHELBY WTP
BUILDING IMPROVEMENTS

2020

ALABAMA LICENSED NO. 23366 PROFESSIONAL ENGINEER MARK S. COLES

06/26/20 NOT VALID WITHOUT SIGNATURE

BAR = 1"

Title: PROJECT LEGEND, ABBREVIATIONS, SYMBOLS, ETC.

BID SET

Drawing	
Project No.	
Date	6-2020
Scale	AS SHOWN
Sheet	2

COPYRIGHT © MUNICIPAL CONSULTANTS, INC.

GENERAL NOTES

1. THE CONTRACTOR IS FULLY AND SOLELY RESPONSIBLE FOR SAFETY DURING CONSTRUCTION. THE CONTRACTOR IS SOLELY RESPONSIBLE FOR THE PROCEDURES, TECHNIQUES, MEANS AND METHODS OF CONSTRUCTION.

2. WATER TREATMENT PLANTS CONTAIN MANY DANGERS AND HAZARDS. THESE INCLUDE, BUT ARE BY NO MEANS LIMITED TO, SUCH DANGERS AS CONFINED SPACES, ATMOSPHERES WITH DANGEROUSLY LOW OXYGEN LEVELS, TOXIC AND EXPLOSIVE GASES, POTENTIALLY HAZARDOUS GASES STORED AND USED ONSITE, SEWAGE AND SLUDGE WITH PATHOGENS, ELECTRICAL HAZARDS, FALLING HAZARDS, DROWNING HAZARDS, NATURAL GAS HAZARDS, UNANTICIPATED EQUIPMENT STARTING, AND TRENCH DANGERS, AMONG OTHERS. NOTE THAT POWER IN A PANEL, AN ENCLOSURE, OR AT EQUIPMENT, ETC., MAY ORIGINATE FROM MULTIPLE, DIFFERENT AND INDEPENDENT SOURCES. THE CONTRACTOR SHALL HAVE A THOROUGH UNDERSTANDING OF ALL THE DANGERS AND HAZARDS ASSOCIATED WITH THIS TYPE OF WORK. THE CONTRACTOR SHALL INSURE THAT ALL HIS PERSONNEL AND ALL SUBCONTRACTOR PERSONNEL, ETC., FOLLOW ALL APPROPRIATE SAFETY PRECAUTIONS AT ALL TIMES. CONTINUOUSLY COMPLY WITH ALL OSHA REGULATIONS AND REQUIREMENTS, ETC. AND ALWAYS FOLLOW GOOD SAFETY PRACTICES. THE CONTRACTOR SHALL BE AWARE THAT THIS IS AN OPERATING FACILITY AND THAT PLANT PERSONNEL MUST MAKE THEIR ROUNDS THROUGH ALL AREAS AND BUILDINGS IN THE PLANT 24–HOURS PER DAY FOR 7–DAYS PER WEEK. AS SUCH, THE CONTRACTOR MUST CAREFULLY PLAN HIS ACTIVITIES AND ALWAYS PROVIDE ADEQUATE SAFETY BARRIERS AND OTHER MEASURES AS DESIRABLE, ETC., TO CONTINUOUSLY PROTECT PLANT PERSONNEL AND VISITORS, AS WELL AS HIS OWN PERSONNEL. SAFETY IS THE RESPONSIBILITY SOLELY OF THE CONTRACTOR. NEITHER THE OWNER NOR THE ENGINEER HAVE ANY DUTY TO REVIEW THE SAFETY PRACTICES OF THE CONTRACTOR.

3. THE CONTRACTOR SHALL PROVIDE TEMPORARY FACILITIES FOR SAFETY, INCLUDING BUT BY NO MEANS LIMITED TO, GUARDRAILS, BARRIERS, LIGHTING, AND SIGNS, ETC., AS DESIRABLE FOR THE PROTECTION OF THE PLANT VISITORS AND PERSONNEL WHO MUST OPERATE AND MAINTAIN THE PLANT THROUGHOUT THE COURSE OF CONSTRUCTION. THE CONTRACTOR SHALL PERFORM HIS WORK AND MAINTAIN CLEAN AND CLEAR PASSAGES IN A MANNER TO ELIMINATE TRIPPING HAZARDS DURING CONSTRUCTION TO THE GREATEST EXTENT POSSIBLE.

4. WTPS HAVE MANY HAZARDS FROM WHICH THE GENERAL PUBLIC MUST BE PROTECTED. THE CONTRACTOR SHALL PERFORM AND COORDINATE HIS WORK TO MAINTAIN THE WTP SECURITY. THIS SHALL INCLUDE, BUT NOT BE LIMITED TO, LOCKING AND CONTROLLING ACCESS THROUGH GATE AND FOR TAKING OTHER MEASURES AS APPLICABLE TO MAINTAIN A SECURE SITE, WHETHER OR NOT WORK IS ONGOING.

5. THIS IS AN EXISTING PLANT THAT HAS BEEN MODIFIED AFTER THE ORIGINAL CONSTRUCTION. MUCH INFORMATION IS BASED ON DRAWINGS PREPARED FOR THE CONSTRUCTION OF THE ORIGINAL PLANT AND OTHER ADDITIONS. MUCH OF THIS INFORMATION HAS NOT BEEN FIELD VERIFIED. CONTRACTOR SHALL FIELD VERIFY INFORMATION AS REQUIRED FOR THE TIMELY PROSECUTION OF THE WORK SO AS NOT TO DELAY CONSTRUCTION AND TO ALLOW TIMELY ORDERING OF CORRECT MATERIALS, COORDINATION WITH OTHER PROJECT ELEMENTS, AND EFFICIENT SCHEDULING. THERE SHALL BE NO ADDITIONAL PAYMENT OR TIME IF THE CONTRACTOR FAILS TO DO THIS.

6. RESERVED

7. CONTRACTOR SHALL MAINTAIN TRAFFIC FLOW INTO AND THROUGHOUT THE PLANT WITH A MINIMUM DISRUPTION OF ACCESS.

8. THE CONTRACTOR SHALL PREVENT ANY CONSTRUCTION RELATED MATERIALS OR DEBRIS FROM GETTING INTO THE FLOWSTREAM AND/OR DAMAGING EQUIPMENT. THE CONTRACTOR SHALL BE RESPONSIBLE FOR ALL COSTS INCURRED BY THE OWNER DUE TO SUCH PROBLEMS.

9. CONTRACTOR TO FIELD VERIFY ALL EXISTING SIZES, DIMENSIONS, QUANTITIES, ETC. BEFORE ORDERING MATERIALS.

10. THERE SHALL BE NO ADDITIONAL/EXTRA PAYMENT FOR REPLACING DAMAGED SIDEWALK, CURB AND GUTTER, OTHER CONCRETE, ETC. OR PATCHING DAMAGED PAVEMENT.

11. THIS PROJECT REQUIRES WORK IN AN EXISTING, OPERATING TREATMENT PLANT. AS SUCH, THE CONTRACTOR SHOULD ANTICIPATE THE PROBLEMS ASSOCIATED WITH SUCH WORK, INCLUDING BUT NOT LIMITED TO, COORDINATION OF ALL WORK WITH THE OWNER (THROUGH THE ENGINEER) INCLUDING MAKING TIE–INS, ELECTRICAL TIE–INS AND MODIFICATIONS, AND INTERRUPTIONS DURING SUITABLE PERIODS, THOROUGHLY PLANNING WORK ACTIVITIES TO MINIMIZE INTERRUPTIONS OF NORMAL OPERATIONS, MAINTAINING PLANT SAFETY FOR THE PLANT OPERATIONS AND MAINTENANCE STAFF, AND LEAKING GATES AND VALVES, ETC. SOME ACTIVITIES MAY BE BEST PERFORMED DURING THE EARLY MORNING HOURS OR DRY WEATHER.

12. ALL WORK ACTIVITIES (INCLUDING ELECTRICAL) THAT AFFECT PLANT OPERATIONS MUST BE SEQUENCED WITH THE EXISTING PLANT OPERATIONS. THESE SHALL BE CAREFULLY PLANNED AND COORDINATED WITH BOTH THE OWNER AND THE ENGINEER TO RESULT IN A MINIMUM OF INTERFERENCE WITH THE EXISTING OPERATIONS. THE CONTRACTOR SHALL PERFORM AS MUCH PRELIMINARY OR ASSEMBLY WORK AS POSSIBLE PRIOR TO INITIATING OPERATIONS REQUIRING SEQUENCING. WHERE APPLICABLE, THE CONTRACTOR SHALL HAVE STANDBY EQUIPMENT ON SITE SUCH THAT THE LOSS OF INDIVIDUAL EQUIPMENT WILL NOT PREVENT THE COMPLETION OF SUCH CONNECTIONS, ETC.

13. CONTRACTOR SHALL PROVIDE ALL MISCELLANEOUS EQUIPMENT AND MATERIALS REQUIRED FOR A COMPLETE AND FULLY FUNCTIONAL SYSTEM AT NO ADDITIONAL COST TO THE OWNER.

14. KEEP THE ELECTRICAL POWER TO ALL NEW EQUIPMENT SHUTOFF AND PADLOCKED OFF UNTIL IT HAS BEEN STARTED UP, TESTED, AND TURNED OVER TO THE OWNER FOR NORMAL OPERATION.

15. THE CONTRACTOR SHOULD ANTICIPATE THAT EXISTING VALVES AND GATES OR OTHER FLOW CONTROL STRUCTURES OR DEVICES WILL LEAK.

16. NOTE THAT THE PROGRESS OF THE WORK MAY BE AFFECTED BY THE PLANT DEMANDS WHICH VARY DURING THE DAY, SEASONABLY, AND WITH RAINFALL. TIE–INS AND OTHER MODIFICATIONS TO EXISTING STRUCTURES MAY HAVE TO BE PERFORMED DURING LOW DEMAND PERIODS. COORDINATE TIE–INS WITH THE OWNER/ENGINEER.

17. CONTRACTOR SHALL BE RESPONSIBLE FOR SITE DRAINAGE, STORM WATER PERMITS AND COMPLIANCE WITH ALL GOVERNMENTAL STORM WATER REGULATIONS. CONTRACTOR SHALL OBTAIN AND PAY FOR ALL PERMITS (IF REQUIRED).

18. ALL CONSTRUCTION TO BE IN ACCORDANCE W/TALLADEGA COUNTY RULES AND REGULATIONS. CONTRACTOR SHALL OBTAIN & PAY FOR ALL PERMITS REQUIRED FOR CONSTRUCTION.

DEMOLITION NOTES

1. THE CONTRACTOR SHALL BE SOLELY RESPONSIBLE FOR THE PROPER DISPOSAL OF ANY AND ALL EXCESS MATERIALS, EQUIPMENT, ETC. RESULTING FROM THE DEMOLITION AND/OR THE WORK PERFORMED. ANY AND ALL EXCESS MATERIALS, EQUIPMENT, CONSTRUCTION WASTE, METAL, TIMBERS, ETC. SHALL BE HAULED OFF–SITE AND PROPERLY DISPOSED OF BY THE CONTRACTOR AT NO ADDITIONAL COST TO THE OWNER. ALL COST(S) ASSOCIATED WITH THIS WORK SHALL BE THE RESPONSIBILITY OF THE CONTRACTOR. IT IS THE CONTRACTOR'S RESPONSIBILITY TO REMOVE AND PROPERLY DISPOSE OF ALL EQUIPMENT, MATERIALS, ETC. REQUIRED TO COMPLETE THE PROJECT.

2. THE STRUCTURES ARE EXISTING. THE CONTRACTOR SHALL REMOVE AND DEMOLISH ALL ITEMS NOTED OR INFERRED. THE CONTRACTOR SHALL BE AWARE THAT ALL PIPING, ELECTRICAL, EQUIPMENT, ETC. THAT WILL BE REQUIRED TO BE REMOVED MAY NOT BE SHOWN OR NOTED ON THE PLAN VIEW OR SECTIONS. IT IS THE CONTRACTOR'S RESPONSIBILITY TO REMOVE AND PROPERLY DISPOSE OF ALL EQUIPMENT, MATERIALS, ETC. REQUIRED TO COMPLETE THE PROJECT.

3. ALL UNUSED/OLD ANCHOR BOLTS, MISCELLANEOUS METAL, ETC. SHALL BE CUT AND GROUND SMOOTH FLUSH (OR BELOW THE SURFACE) WITH SURROUNDING CONCRETE FLOOR TO PREVENT TRIPPING HAZARDS.

4. CONTRACTOR SHALL CUT/GRIND ALL EXISTING UNUSED CONDUITS MADE OBSOLETE BY THIS PROJECT FLUSH WITH FINISHED FLOOR SO NOT TO CREATE TRIPPING HAZARDS. PATCH OLD EXISTING CONDUITS WITH NON-SHRINK GROUT. THE CONTRACTOR SHALL REMOVE THE WIRES IF POSSIBLE.

5. ALL EXISTING EXPOSED CONDUIT, SWITCHES, BOXES, ETC. THAT WILL NO LONGER BE IN USE AFTER THE PROJECT IS COMPLETE SHALL BE REMOVED.

PROJECT NOTES:

1. THE CONTRACTOR SHALL COMPLETE ALL BUILDING IMPROVEMENTS NOTED OR INFERRED ON THE DRAWINGS.

2. THE CONTRACTOR SHALL BE SOLELY RESPONSIBLE FOR THE PROPER DISPOSAL OF ANY AND ALL EXCESS MATERIALS, EQUIPMENT, ETC. RESULTING FROM THE WORK PERFORMED. ANY AND ALL EXCESS MATERIALS, EQUIPMENT, CONSTRUCTION WASTE, ETC. SHALL BE HAULED OFF–SITE AND PROPERLY DISPOSED OF BY THE CONTRACTOR AT NO ADDITIONAL COST TO THE OWNER. ALL COST(S) ASSOCIATED WITH THIS WORK SHALL BE THE RESPONSIBILITY OF THE CONTRACTOR.

3. THE STRUCTURES ARE EXISTING. THE CONTRACTOR SHALL BE AWARE THAT ALL PIPING, ELECTRICAL, ELECTRICAL CONDUIT, CONTROL PANELS, HANDRAIL, EQUIPMENT, ETC. MAY NOT BE SHOWN ON THE SITE PLAN OR IN PLAN VIEW OR SECTIONS. IT IS THE CONTRACTOR'S RESPONSIBILITY TO VERIFY/IDENTIFY ANY CONFLICTS/PROBLEMS WITH THE PROPOSED IMPROVEMENTS AND THE EXISTING CONDITIONS AND MAKE ANY ADJUSTMENTS NECESSARY FOR A COMPLETE AND FULLY FUNCTIONAL PROJECT.

4. THE PIPING AND ELECTRICAL LOCATIONS SHOWN IN THE DRAWINGS ARE BASED ON OLD DRAWINGS AND THE ACCURACY IS UNKNOWN. THE DRAWINGS DO NOT NOT SHOW ALL OF THE PIPING, ELECTRICAL, ETC. THROUGHOUT THE SITE. THE CONTRACTOR SHALL REMOVE/REPLACE, REROUTE, ETC. ANY ITEMS THAT CONFLICT WITH THE PROPOSED ITEMS TO BE INSTALLED.

5. ALL EXISTING YARD PIPING AND ELECTRICAL FACILITIES NOT SHOWN. WHERE SHOWN, ALL EXISTING PIPING AND EXISTING ELECTRICAL IS APPROXIMATE AND MUST BE FIELD DETERMINED BY THE CONTRACTOR. ALL ELECTRICAL FACILITIES, WIRING, CONDUIT, DUCT BANKS, AND APPURTENANCES ARE NOT SHOWN. USE APPROPRIATE MEASURES AND SAFETY PRECAUTIONS TO AVOID DIGGING INTO ELECTRICAL LINES AND OTHER POTENTIAL DANGERS.

6. ONSITE POWER DEMANDS OF THE CONTRACTOR MAY BE SERVED FROM THE OWNERS EXISTING ONSITE POWER SUPPLY. WHERE CONSTRUCTION DEMANDS (E.G. CONCRETE VIBRATORS) EXCEED ONSITE POWER AVAILABILITY AT A LOCATION, PROVIDE AUXILIARY POWER AT NO ADDITIONAL COST TO THE OWNER. ANY POWER DEMANDS OF THE CONTRACTOR THAT INTERFERE WITH PLANT OPERATION (E.G. NUISANCE TRIPPING OF BREAKERS) SHALL BE REMOVED IMMEDIATELY AND REPLACED WITH AUXILIARY POWER.

7. CONTRACTOR SHALL PROVIDE A DUMPSTER AND PORT-A-JON FACILITIES FOR HIS FORCES, COORDINATE LOCATION OF FACILITIES WITH OWNER AND ENGINEER.

8. THE CONTRACTOR SHALL BE AWARE OF THE EXISTING HIGH VOLTAGE POWER LINES THAT EXTEND OVER AND THROUGH THIS SITE. COORDINATE ALL WITH THE POWER COMPANY FOR SHUTDOWNS (IF POSSIBLE), OUTAGES, ETC. COORDINATE WITH THE OWNER/ENGINEER.

9. ALL NEW TIMBER MATERIAL (NOT ATTACHED TO CONCRETE) SHALL BE #2 SOUTHERN PINE KILN DRIED IN SIZES AND DIMENSIONS TO MATCH EXISTING TIMBERS BEING REPLACED. MUCH OF THE MEMBERS APPEAR TO BE ROUGH CUT SIZES. CONTRACTOR SHALL VERIFY ALL SIZES AND DIMENSIONS OF MEMBERS THROUGHOUT THE STRUCTURES PRIOR TO PROVIDING MATERIALS.

10. ALL REPLACED MEMBERS/TIMBERS OR NEW MEMBERS INSTALLED AGAINST CONCRETE SUCH AS BASE PLATES, SOLE PLATES, ALONG COLUMNS, ETC. OR IN CONTACT WITH THE GROUND SHALL BE SOUTHERN PINE PRESSURE TREATED WITH ALKALINE COPPER QUATERNARY (ACQ) IN ACCORDANCE WITH THE AMERICAN WOOD PROTECTION ASSOCIATION (AWPA) STANDARD. ALL OTHER PRESSURE TREATED LUMBER PROVIDED AND INSTALLED SHALL BE THE "ABOVE GROUND" TYPE.

A. ACQ RETENTION = 0.40 LB/FT3 GROUND CONTACT
0.25 LB/FT3 ABOVE GROUND

B. ALL CONNECTORS, FASTENERS AND OTHER METAL PRODUCTS USED WITH ACQ PRESSURE TREATED LUMBER SHALL BE HOT-DIP GALVANIZED, STAINLESS STEEL OR AS RECOMMENDED BY THE ACQ MANUFACTURER.

11. ALL TRUSS OR COLUMN MEMBERS REPLACED IN THE BUILDINGS SHALL BE REPLACED WITH HARDWOOD (OAK OR APPROVED MATERIAL) MATCHING THE EXACT DIMENSIONS OF THE EXISTING MEMBERS. CONTRACTOR SHALL VERIFY ALL DIMENSIONS.

12. THE STRUCTURE TIMBERS ARE CURRENTLY PAINTED. ALL NEW TIMBERS PROVIDED AND INSTALLED DO NOT HAVE TO BE PAINTED.

13. WHEN THE WOOD MEMBERS AND METAL ROOF AND SIDING PANELS ARE REPLACED ON THE FILTER BUILDING THE CONTRACTOR SHALL PROTECT THE OPERATING FILTERS BY COVERING THEM ENTIRELY WITH 3/8" PLYWOOD AND 2"X4" FRAMED PANELS OR SOMETHING SIMILAR. THESE PANELS SHALL PREVENT MATERIALS, SCREWS, TOOLS, ETC. FROM ENTERING THE FILTERS DURING CONSTRUCTION. THESE PANELS CAN BE BUILT SUCH THAT THEY ARE MOVABLE FROM FILTER TO FILTER. THE CONTRACTOR SHALL SUBMIT THEIR PLAN TO PROTECT FILTERS TO OWNER/ENGINEER FOR APPROVAL PRIOR TO COMMENCING WITH WORK.

14. WHEN INSTALLING THE METAL ROOFING AND SIDING, THE CONTRACTOR SHALL FOLLOW ALL MANUFACTURERS' INSTALLATION RECOMMENDATIONS AND INSTRUCTIONS. METAL ROOFING AND SIDING SHALL NOT SPAN MORE THAN 5' OR AS REQUIRED BY THE METAL MANUFACTURER. THE CONTRACTOR SHALL PROVIDE ALL SUB-FRAMING TIMBERS, SUPPORTS, ETC. SUCH THAT METAL IS PROPERLY SUPPORTED.

15. ALL NAILS, FASTENERS, ETC. USED FOR TIMBER, FRAMING, PURLIN, ETC. ATTACHMENT THROUGHOUT THE STRUCTURE SHALL BE CONSISTENT WITH THE INTERNATIONAL BUILDING CODE (IBC) FOR THE WOOD AND MEMBER SIZES BEING USED. THE CONTRACTOR SHALL PROVIDE THE CORRECT LENGTH AND SIZE FASTENERS AND AT RECOMMENDED SPACING PURSUANT TO THE IBC. THE CONTRACTOR SHALL PROVIDE ALL NAILS, FASTENERS, ETC. AS REQUIRED FOR THE PROJECT. THE LENGTH OF THE FASTENERS (NAILS) SHALL BE 2.5 TIMES (MIN.) THE NET THICKNESS OF EACH CONNECTING BOARD (I.E. THE BOARD THE NAIL IS EXTENDING THROUGH).

16. THE CONTRACTOR SHALL ADHERE TO ALL IBC INSTALLATION RECOMMENDATIONS AND INSTRUCTIONS.

17. THE CONTRACTOR SHALL PROVIDE MINIMUM OF 4 10D OR LARGER NAILS IN EACH NAILED CONNECTION FOR MEMBERS 2"X8" OR LESS. PROVIDE MINIMUM 6 10D OR LARGER NAILS IN EACH NAILED CONNECTION FOR MEMBER 2"X10" OR LARGER. WHERE SIMPSON CONNECTORS ARE INDICATED, PROVIDE SIMPSON SPECIFIED NAIL IN ALL AVAILABLE HOLES PER THE MANUFACTURER'S RECOMMENDATIONS.

SITE NOTES:

1. RETURN ALL SURFACES TO THEIR PRE-CONSTRUCTION CONDITIONS, EXCEPT WHERE IMPROVEMENTS ARE SHOWN ON THE DRAWINGS. ALL GRAVEL AREAS DAMAGED OR DISTURBED DURING CONSTRUCTION SHALL BE REPLACED WITH NEW GRAVEL OF THE SAME SIZE AND GRADATION AT THE SAME OR GREATER THICKNESS.

2. ALL DAMAGED OR DISTURBED AREAS DURING CONSTRUCTION SHALL BE BACKFILLED AND/OR GRADED TO MATCH SURROUNDING GRADES. ALL DISTURBED AREAS SHALL BE GRASSED TO MATCH SURROUNDING AREAS. FINAL GRADING SHALL BE HAND RAKED AND ALL STONES, BOULDERS, ETC. REMOVED TO ALLOW MOWING. CONTRACTOR SHALL PROVIDE TOPSOIL, FERTILIZER, GRASSING, ETC. AS NECESSARY TO MAINTAIN AN EROSION FREE SURFACE CAPABLE OF MAINTAINING A COMPLETE STAND OF GRASS.

3. ALL EXISTING SIDEWALKS, WALKWAYS, PADS, PAVEMENT, CURBS, ETC. AND ANY OTHER CONCRETE OR ASPHALT DAMAGED DURING CONSTRUCTION SHALL BE REPLACED IN LIKE KIND AT NO ADDITIONAL COST TO THE OWNER. CONCRETE SHALL BE REPLACED FROM THE NEAREST UNDAMAGED CONSTRUCTION OR CONTROL JOINTS. ASPHALT SHALL BE REPLACED AT LEAST 10' ON EACH SIDE OF DAMAGED AREA AND FULL WIDTH OF ROAD. ASPHALT SHALL BE NEATLY SAW CUT IMMEDIATELY PRIOR TO REPAVING. ALL EXISTING SIDEWALKS, WALKWAYS, PADS, PAVEMENT, ETC. AND ALL OTHER CONCRETE AND ASPHALT MAY NOT BE SHOWN ON THESE DRAWINGS.

4. ALL FENCING (IF ANY) DAMAGED/REMOVED DURING CONSTRUCTION SHALL BE REPLACED IN LIKE KIND AT NO ADDITIONAL COST TO THE OWNER. IF THE CONTRACTOR HAS TO REMOVE ANY PORTION OF FENCING FOR CRANE LOCATION, CRANE ACCESS, ETC. THE CONTRACTOR SHALL PROVIDE TEMPORARY FENCING DURING CONSTRUCTION. ONCE CONSTRUCTION IS COMPLETE, THE CONTRACTOR SHALL INSTALL THE FENCING IN SAME LOCATION PRIOR TO CONSTRUCTION. THE CONTRACTOR MAY REUSE ALL EXISTING FENCING MATERIALS IF NOT DAMAGED. IF DAMAGED, THE CONTRACTOR SHALL REPLACE ALL COMPONENTS NECESSARY FOR A COMPLETE INSTALLATION.

PIPING NOTES:

1. ALL EXISTING YARD PIPING AND ELECTRICAL FACILITIES NOT SHOWN. WHERE SHOWN, THE PIPING LOCATIONS ARE BASED ON OLD DRAWINGS AND THE ACCURACY IS UNKNOWN. ALL EXISTING ELECTRICAL OR EXISTING YARD PIPING AND ELECTRICAL LINES ARE APPROXIMATE AND MUST BE FIELD DETERMINED BY THE CONTRACTOR.

2. CONTRACTOR SHALL FURNISH AND INSTALL ALL TEES, INCREASERS, SPOOL PIECES, FITTINGS, ETC. REQUIRED FOR PIPING AND CONNECTIONS INDICATED ON PIPING PLANS BUT NOT SPECIFICALLY CALLED OUT.

3. ALL GAS VENT PIPING SHALL BE STAINLESS STEEL AS RECOMMENDED BY THE UNIT HEATER MANUFACTURER. COORDINATE WITH THE ENGINEER.

4. ALL PIPING AND FITTINGS SUPPLIED FOR CHEMICAL LINES SHALL BE SCH. 80 PVC. PROVIDE GLUE RATED FOR CHEMICAL BEING TRANSFERRED/TRANSMITTED. ALL VALVES SHALL BE TRUE UNION SCH. 80 PVC WITH EPDM GASKETS.

5. CONTRACTOR SHALL FURNISH AND INSTALL ALL REQUIRED PIPING, TEES, FITTINGS, REDUCERS, INCREASERS, BUSHINGS, SPOOL PIECES, ETC. AS REQUIRED FOR A COMPLETE AND FUNCTIONAL PIPING SYSTEM INSTALLATION. CONTRACTOR SHALL VERIFY EXACT CONNECTION FITTINGS, SIZES, TYPES, ETC. PRIOR TO ORDERING MATERIALS. ALL PIPING AND CONNECTION ITEMS MAY NOT BE SPECIFICALLY CALLED OUT ON THE DRAWINGS. FLUSH ALL LINES THOROUGHLY BEFORE PLACING NEW LINES IN SERVICE.

6. THE CONTRACTOR SHALL PROVIDE ALL ALUMINUM OR STAINLESS STEEL PIPE SUPPORTS REQUIRED (I.E. UNI-STRUT, L BRACKETS, CLAMPS, ETC.) AND HARDWARE (I.E. BOLTS, NUTS, WASHERS, ETC.) AS REQUIRED TO PROPERLY SUPPORT ALL PIPING. PROVIDE CUSHION CLAMPS FOR DISSIMILAR METALS. ALL ALUMINUM MOUNTED TO CONCRETE SHALL BE COATED WITH A BITUMASTIC COATING. THE CONTRACTOR SHALL PROVIDE ALL SUPPORTS REQUIRED.

7. ALL ANCHOR BOLTS, WEDGE ANCHORS, EPOXY ANCHORS, MOUNTING HARDWARE, ETC. AND APPURTENANCES (I.E. BOLTS, WASHER, NUTS, ETC.) ON THE PROJECT SHALL BE 304 STAINLESS STEEL (MIN.). ALL THREADS ON STAINLESS STEEL BOLTS USED SHALL BE COATED WITH ANTI-GALLING COMPOUND DESIGNED FOR STAINLESS STEEL.

8. THE SCH. 80 PVC LINES SHALL BE WATER TESTED AT 100 PSI FOR 2 HOURS WITH ZERO LEAKAGE. ALL WATER SHALL BE REMOVED ONCE TESTING IS COMPLETE.

9. ALL LINES AND VENTS SHALL BE RUN STRAIGHT, LEVEL, AND PLUMB. ALL PIPING SHALL BE RUN IN A NEAT AND CONCISE MANNER AND SHALL BE PROPERLY SUPPORTED.

PARTIAL SEQUENCING NOTES:

IN GENERAL, THE CONTRACTOR SHALL DEVELOP A SCHEDULE FOR HIS WORK THAT ALLOWS IT TO PROCEED IN AN ORDERLY AND LOGICAL MANNER. THE SCHEDULE SHALL CONSIDER ALL REQUIREMENTS CONTAINED IN THE CONTRACT, AS WELL AS, OTHER RESTRICTIONS INHERENT IN PERFORMING WORK (TO EXISTING AND NEW FACILITIES) IN A WATER TREATMENT PLANT THAT MUST BE REMAIN IN OPERATION.

THE PARTIAL SEQUENCE BELOW REPRESENTS AN APPROACH TO ACCOMPLISHING THE WORK REQUIRED (IT DOES NOT LIST ALL CONSTRUCTION ACTIVITIES REQUIRED). THE CONTRACTOR SHALL REVIEW THE PLANS AND SPECIFICATIONS THOROUGHLY TO GENERATE HIS OWN COMPLETE CONSTRUCTION SEQUENCING/SCHEDULE TAKING INTO CONSIDERATION THE WORK ITEMS LISTED BELOW. ALL WORK SHALL BE COORDINATED EXTENSIVELY WITH THE ENGINEER AND OWNER.

COORDINATE ALL WORK AND TIMES OF SHUTDOWN WITH THE OWNER AND ENGINEER. THE OWNER SHOULD BE GIVEN AMPLE AMOUNT OF NOTICE BEFORE A SHUTDOWN/TIE–IN IN ORDER TO FILL ALL BASINS/CLEARWELLS AND FILL ALL DISTRIBUTION TANKS IN PREPARATION FOR EXTENDED DOWN TIME. THE CONTRACTOR SHALL NOT MAKE A SHUTDOWN/TIE–IN WITHOUT OWNER APPROVAL.

SOME OF THE WORK ITEMS LISTED BELOW CAN OCCUR SIMULTANEOUSLY. ACCORDINGLY, THE NUMBER BESIDE EACH ITEM IS FOR REFERENCE ONLY.

1. THE REMOVAL AND REPLACEMENT OF THE METAL SIDING ON THE SOUTH SIDE OF THE ADMINISTRATION BUILDING WILL LIKELY REQUIRE THE SETTLING BASIN #1 BE DRAINED AND EQUIPMENT PLACED INSIDE OF IT. THE SETTLING BASIN SHALL ONLY BE DRAINED DURING THE MONTHS OF NOVEMBER TO THE END OF MARCH. COORDINATE EXACT TIMING WITH THE OWNER/ENGINEER. ONCE A SETTLING BASIN IS TAKEN OUT OF SERVICE, IT SHALL BE OUT OF SERVICE FOR NO MORE THAN 1 MONTH. COORDINATE ALL WITH THE OWNER/ENGINEER.

2. THE CONTRACTOR SHALL SCHEDULE HIS WORK SUCH THAT NO ROOF SECTION IS LEFT OPEN OVER NIGHT OR DURING RAIN EVENTS. CONTRACTOR SHALL SEQUENCE THE METAL REMOVAL AND REPLACEMENT SUCH THAT ROOF SECTIONS CAN BE COVERED EACH NIGHT OR DURING A RAIN EVENT. CONTRACTOR SHALL PROVIDE ALL TEMPORARY COVERS AS REQUIRED.

3. CONTRACTOR SHALL BE AWARE OF THE EXISTING EQUIPMENT AND ELECTRICAL INSIDE EACH OF THESE STRUCTURES. CONTRACTOR SHALL PROPERLY SEQUENCE AND PREPARE WALL SECTIONS FOR REMOVAL AND REPLACEMENT EACH DAY. CONTRACTOR SHALL NOT LEAVE OPEN WALL SECTIONS FOR MULTIPLE DAYS AND SHALL NOT LEAVE SECTIONS OPEN DURING RAINY WEATHER.

THE EXISTING ROOF PANELS ON THE ADMINISTRATION BUILDING ARE ASBESTOS MATERIAL. THE CONTRACTOR SHALL BE AWARE OF THIS AND SHALL MAKE ALL EFFORTS NOT TO DAMAGE OR DISTURB THE EXISTING ROOF PANELS. IF DAMAGED OR DISTURBED, CONTRACTOR SHALL BE FULLY RESPONSIBLE FOR THE PROPER DISPOSAL OF THE ASBESTOS MATERIAL AND THE REPLACEMENT OF THE EXISTING ROOF PANELS.

Municipal Consultants, Inc.
200 Century Park South, Suite 212
Birmingham, Alabama 35226
(205) 822-0397

SHELBY COUNTY COMMISSION
TALLADEGA/SHELBY WTP
BUILDING IMPROVEMENTS
2020

ALABAMA LICENSED NO. 23366 PROFESSIONAL ENGINEER MILES S. COATS
06/26/20 NOT VALID WITHOUT SIGNATURE

BAR = 1"

Title	NOTES
Drawing	BID SET
Project No.	
Date	6–2020
Scale	AS SHOWN
Sheet	3

COPYRIGHT © MUNICIPAL CONSULTANTS, INC.

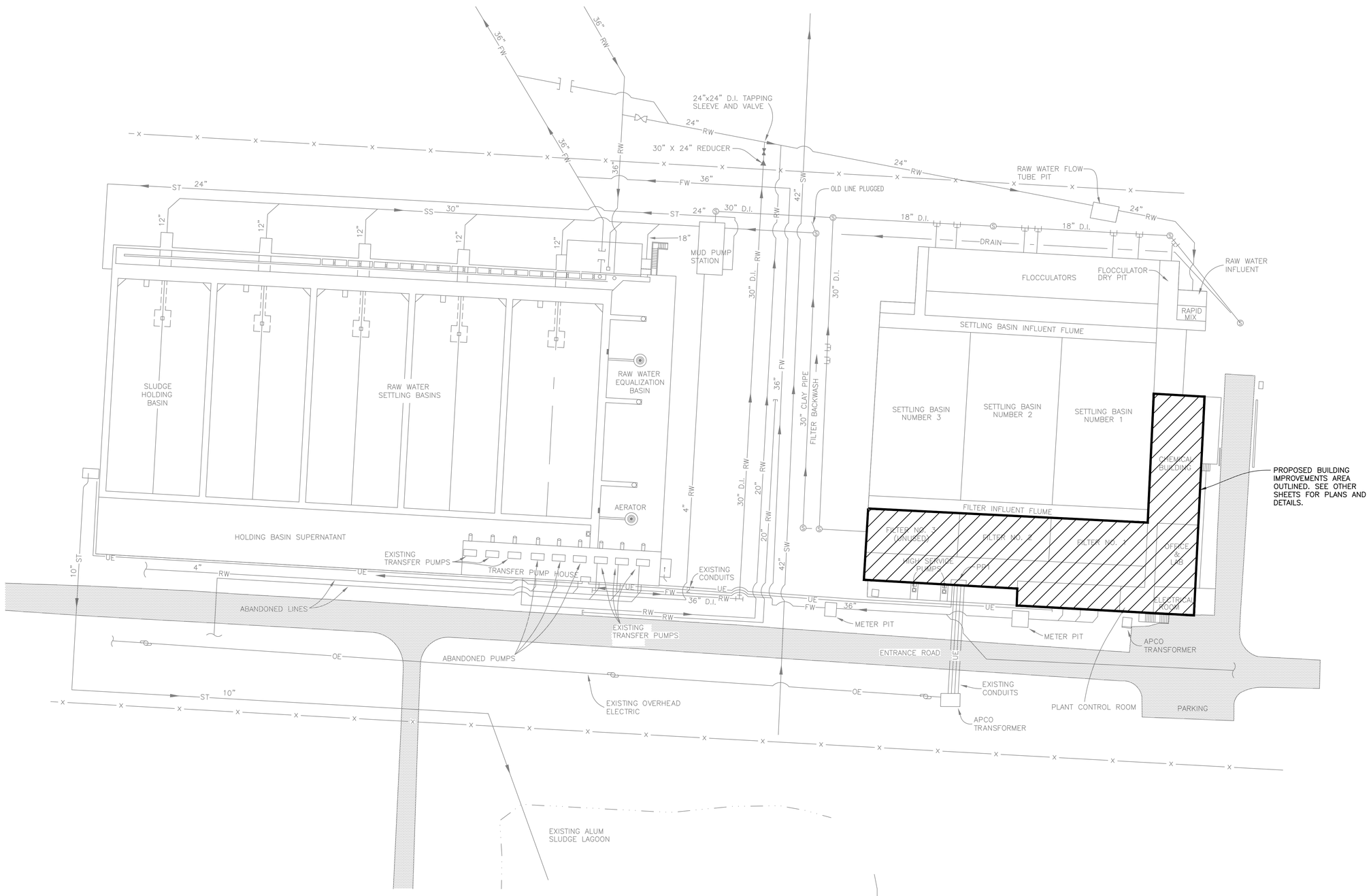

WATER TREATMENT PLANT LAYOUT

SCALE: 1" = 30'

Municipal Consultants, Inc.
200 Century Park South, Suite 212
Birmingham, Alabama 35226
(205) 822-0387

SHELBY COUNTY COMMISSION

TALLADEGA/SHELBY WTP
BUILDING IMPROVEMENTS

2020

ALABAMA LICENSED PROFESSIONAL ENGINEER
LICENSE NO. 23366
STEVEN L. WELLS
06/26/20
NOT VALID WITHOUT SIGNATURE

BAR = 1"

Title	EXISTING WTP SITE PLAN
Drawing	BID SET
Project No.	
Date	6-2020
Scale	1"=10'
Sheet	4

COPYRIGHT © MUNICIPAL CONSULTANTS, INC.

NORTH ELEVATION OF ADMINISTRATION BUILDING

SCALE: N.T.S.

NOTES:

1. ALL METAL SIDING AND ROOF PANELS INDICATED SHALL BE REMOVED AND REPLACED WITH NEW METAL SIDING. COLOR SELECTED BY THE OWNER.

2. CONTRACTOR SHALL BE AWARE OF ALL ITEMS CURRENTLY MOUNTED ON THE OUTSIDE OF THE STRUCTURE. CONTRACTOR SHALL REMOVE AND REINSTALL OR RELOCATE ALL ITEMS (PIPING, BRACKETS, ELECTRICAL, ETC.) REQUIRED FOR INSTALLATION OF NEW METAL SIDING.

3. THE WINDOWS IN LABORATORY AND BATHROOM SHALL REMAIN. CONTRACTOR SHALL SEAL NEW METAL AND TRIM AROUND THESE WINDOWS AS REQUIRED. SEE METAL DETAILS. ALL OTHER WINDOWS SHALL BE REMOVED AND COVERED BY NEW METAL SIDING. CONTRACTOR SHALL PROVIDE CAULK, SEALANT, ETC. AS RECOMMENDED BY THE METAL MANUFACTURER. SEAL AROUND WINDOWS SHALL BE LEAK-TIGHT.

4. CONTRACTOR SHALL FRAME OUT AND INSTALL NEW ROLL-UP DOORS. SEE SECTIONS AND DETAILS.

5. CONTRACTOR SHALL REMOVE ALL CONDUIT AND WIRE FROM BUILDING EXTERIOR AND SHALL REROUTE INSIDE BUILDING. PROVIDE NEW WIRE, CONDUIT, AND JUNCTION BOXES AS REQUIRED. COORDINATE CONDUIT ROUTING LOCATION WITH OWNER/ENGINEER.

6. CONTRACTOR SHALL MAKE ALL NEW WALL PENETRATIONS FOR GAS HEATER VENTS, CHEMICAL TANK VENTS, AND ANY OTHERS NECESSARY ONCE NEW METAL IS INSTALLED AND COMPLETE. WALL PENETRATIONS SHALL BE SEALED AND WATERTIGHT. CONTRACTOR SHALL PROVIDE COUPLINGS, FITTINGS, ETC. AS REQUIRED FOR RECONNECTIONS.

Municipal Consultants, Inc.
200 Century Park South, Suite 212
Birmingham, Alabama 35226
(205) 822-0387

SHELBY COUNTY COMMISSION

TALLADEGA/SHELBY WTP
BUILDING IMPROVEMENTS

2020

ALABAMA LICENSED PROFESSIONAL ENGINEER NO. 23366 MISS. CONSULTANTS

06/26/20

NOT VALID WITHOUT SIGNATURE

BAR = 1"

Title	ELEVATIONS
Drawing	
Project No.	
Date	6-2020
Scale	3/16"=1'
Sheet	5
	BID SET

COPYRIGHT © MUNICIPAL CONSULTANTS, INC.

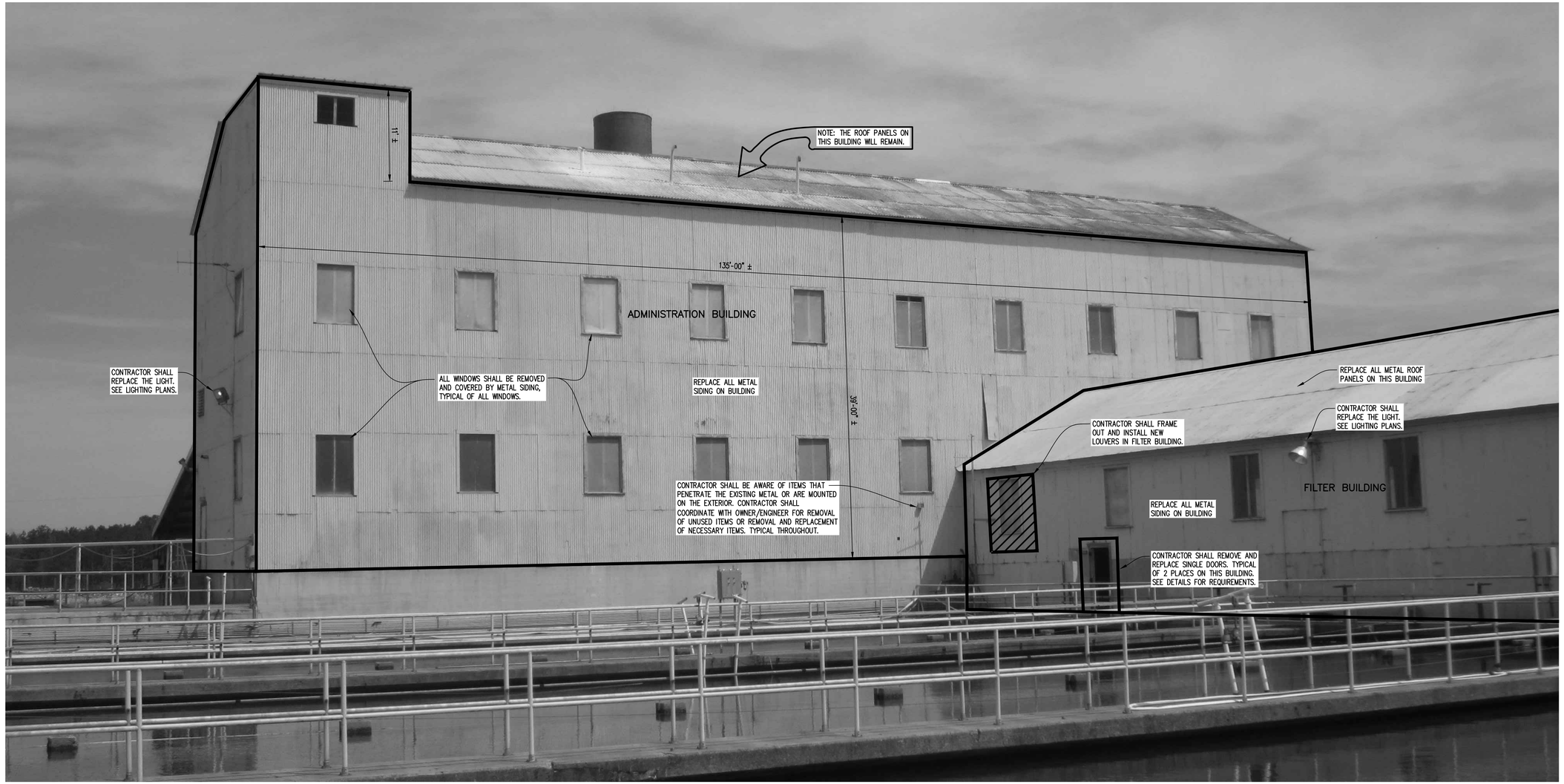

SOUTH ELEVATION OF ADMINISTRATION BUILDING

SCALE: N.T.S.

NOTES:

1. ALL METAL SIDING AND ROOF PANELS INDICATED SHALL BE REMOVED AND REPLACED WITH NEW METAL SIDING. COLOR SELECTED BY THE OWNER.

2. CONTRACTOR SHALL BE AWARE OF ALL WALL PENETRATIONS AND ITEMS CURRENTLY MOUNTED ON THE OUTSIDE OF THE STRUCTURE. CONTRACTOR SHALL REMOVE AND REINSTALL OR RELOCATE ALL ITEMS (PIPING, BRACKETS, ELECTRICAL, EQUIPMENT, ETC.) REQUIRED FOR INSTALLATION OF NEW METAL SIDING. CONTRACTOR SHALL MAKE ALL WALL PENETRATIONS ONCE NEW METAL IS INSTALLED.

Municipal Consultants, Inc.
200 Century Park South, Suite 212
Birmingham, Alabama 35226
(205) 822-0387

SHELBY COUNTY COMMISSION

TALLADEGA/SHELBY WTP
BUILDING IMPROVEMENTS

2020

ALABAMA LICENSED PROFESSIONAL ENGINEER NO. 23366 MUNICIPAL CONSULTANTS, INC.

06/26/20

NOT VALID WITHOUT SIGNATURE

BAR = 1"

Title	ELEVATIONS
	BID SET
Drawing	
Project No.	
Date	6-2020
Scale	1/8"=1'
Sheet	6

COPYRIGHT © MUNICIPAL CONSULTANTS, INC.

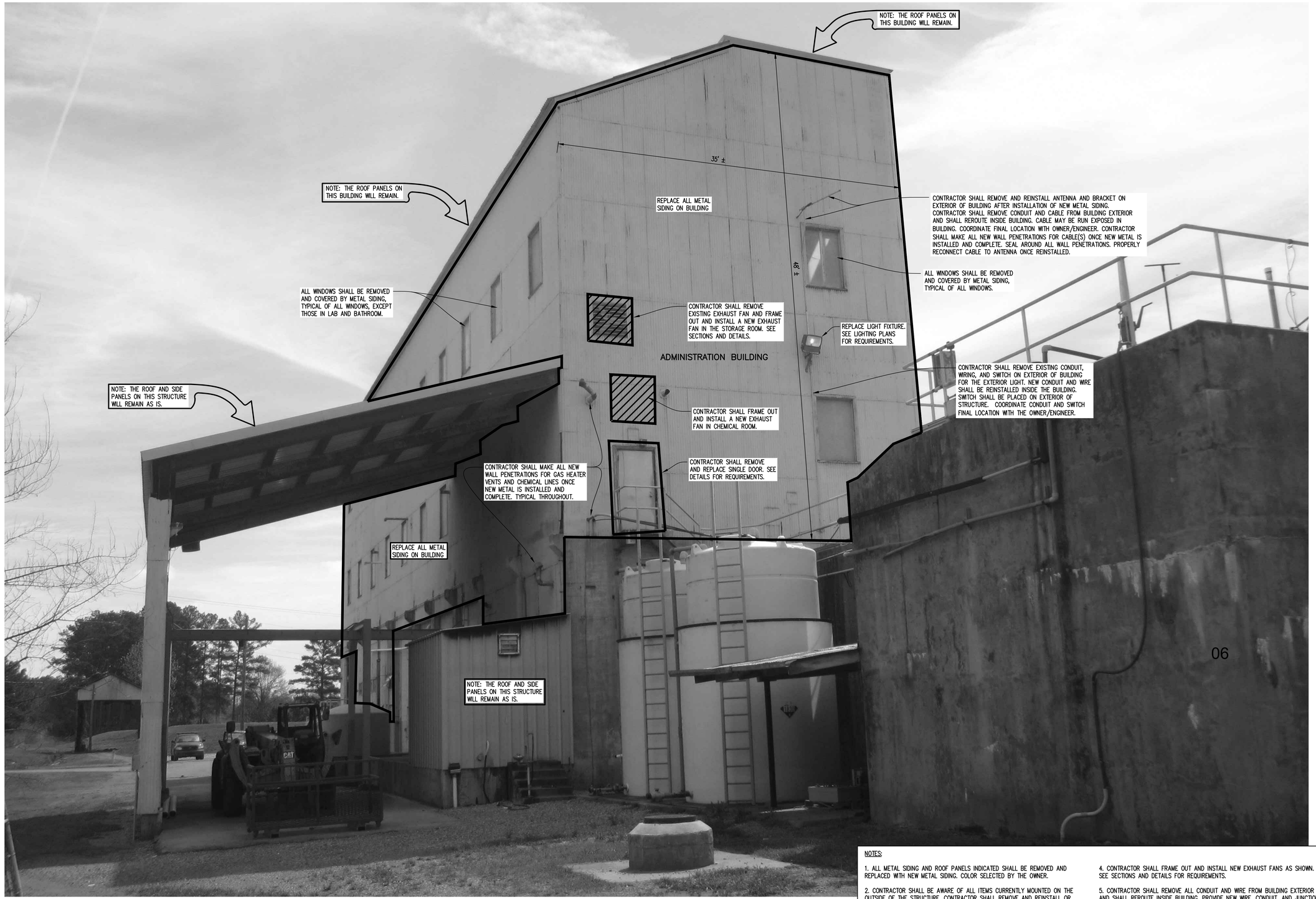

WEST ELEVATION OF ADMINISTRATION BUILDING

SCALE: N.T.S.

NOTES:

1. ALL METAL SIDING AND ROOF PANELS INDICATED SHALL BE REMOVED AND REPLACED WITH NEW METAL SIDING. COLOR SELECTED BY THE OWNER.

2. CONTRACTOR SHALL BE AWARE OF ALL ITEMS CURRENTLY MOUNTED ON THE OUTSIDE OF THE STRUCTURE. CONTRACTOR SHALL REMOVE AND REINSTALL OR RELOCATE ALL ITEMS (PIPING, BRACKETS, ELECTRICAL, ETC.) REQUIRED FOR INSTALLATION OF NEW METAL SIDING.

3. CONTRACTOR SHALL MAKE ALL NEW WALL PENETRATIONS FOR GAS HEATER VENTS, CHEMICAL LINES, AND ANY OTHERS NECESSARY ONCE NEW METAL IS INSTALLED AND COMPLETE. WALL PENETRATIONS SHALL BE SEALED AND WATERTIGHT. CONTRACTOR SHALL PROVIDE COUPLINGS, FITTINGS, ETC. AS REQUIRED FOR RECONNECTIONS.

4. CONTRACTOR SHALL FRAME OUT AND INSTALL NEW EXHAUST FANS AS SHOWN. SEE SECTIONS AND DETAILS FOR REQUIREMENTS.

5. CONTRACTOR SHALL REMOVE ALL CONDUIT AND WIRE FROM BUILDING EXTERIOR AND SHALL REROUTE INSIDE BUILDING. PROVIDE NEW WIRE, CONDUIT, AND JUNCTION BOXES AS REQUIRED. NO CONDUIT SHALL BE INSTALLED ON EXTERIOR OF BUILDING. COORDINATE CONDUIT ROUTING LOCATION WITH OWNER/ENGINEER. SWITCH FOR EXTERIOR LIGHT SHALL BE MOUNTED ON EXTERIOR OF BUILDING AS DIRECTED BY THE OWNER/ENGINEER.

Municipal Consultants, Inc.
200 Century Park South, Suite 212
Birmingham, Alabama 35226
(205) 822-0387

SHELBY COUNTY COMMISSION

TALLADEGA/SHELBY WTP
BUILDING IMPROVEMENTS

2020

ALABAMA LICENSED PROFESSIONAL ENGINEER NO. 23366 J. S. COUSER

NOT VALID WITHOUT SIGNATURE

BAR = 1"

Title	ELEVATIONS
Drawing	BID SET
Project No.	
Date	6-2020
Scale	AS SHOWN
Sheet	7

COPYRIGHT © MUNICIPAL CONSULTANTS, INC.

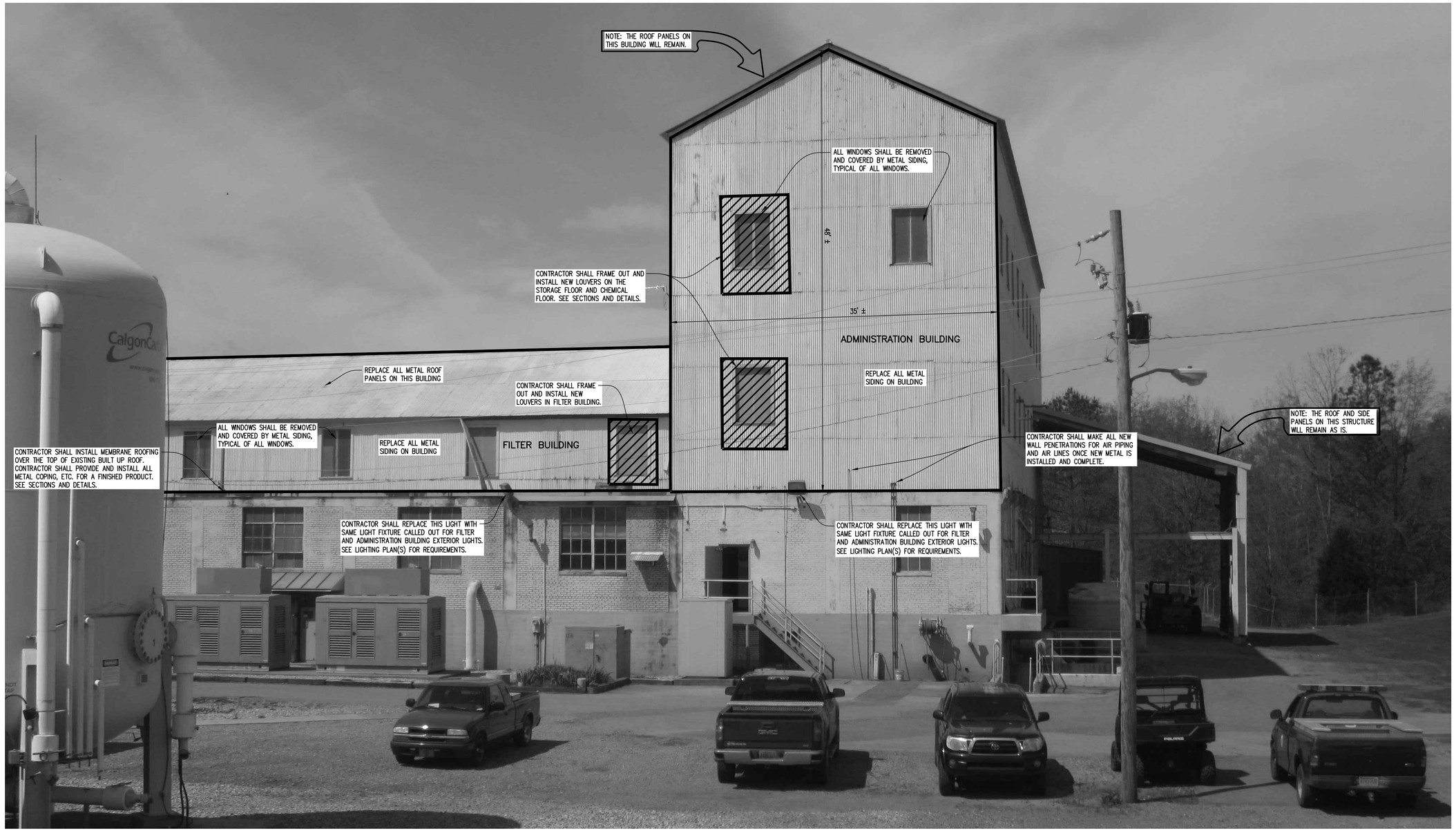

EAST ELEVATION OF ADMINISTRATION BUILDING

SCALE: N.T.S.

NOTES:

1. ALL METAL SIDING AND ROOF PANELS INDICATED SHALL BE REMOVED AND REPLACED WITH NEW METAL SIDING. COLOR SELECTED BY THE OWNER.

2. CONTRACTOR SHALL BE AWARE OF ALL ITEMS CURRENTLY MOUNTED ON THE OUTSIDE OF THE STRUCTURE. CONTRACTOR SHALL REMOVE AND REINSTALL OR RELOCATE ALL ITEMS (PIPING, BRACKETS, ELECTRICAL, ETC.) REQUIRED FOR INSTALLATION OF NEW METAL SIDING.

3. CONTRACTOR SHALL MAKE ALL NEW WALL PENETRATIONS FOR AIR PIPING, AIR LINES, GAS HEATER VENTS, AND ANY OTHERS NECESSARY ONCE NEW METAL IS INSTALLED AND COMPLETE. WALL PENETRATIONS SHALL BE SEALED AND WATERTIGHT. CONTRACTOR SHALL PROVIDE COUPLINGS, FITTINGS, ETC. AS REQUIRED FOR RECONNECTIONS.

4. CONTRACTOR SHALL FRAME OUT AND INSTALL NEW LOUVERS AS SHOWN. SEE SECTIONS AND DETAILS FOR REQUIREMENTS.

Municipal Consultants, Inc.
200 Century Park South, Suite 212
Birmingham, Alabama 35226
(205) 822-0387

SHELBY COUNTY COMMISSION

TALLADEGA/SHELBY WTP
BUILDING IMPROVEMENTS

2020

ALABAMA LICENSED NO. 23366 PROFESSIONAL ENGINEER MARSS COUSTIN

06/26/20

NOT VALID WITHOUT SIGNATURE

BAR = 1"

Title	ELEVATIONS
Drawing	BID SET
Project No.	
Date	6-2020
Scale	AS SHOWN
Sheet	8

COPYRIGHT © MUNICIPAL CONSULTANTS, INC.

WEST ELEVATION OF FILTER BUILDING

SCALE: N.T.S.

NOTES:

1. ALL METAL SIDING AND ROOF PANELS INDICATED SHALL BE REMOVED AND REPLACED WITH NEW METAL SIDING. COLOR SELECTED BY THE OWNER.

2. CONTRACTOR SHALL BE AWARE OF ALL ITEMS CURRENTLY MOUNTED ON THE OUTSIDE OF THE STRUCTURE. CONTRACTOR SHALL REMOVE AND REINSTALL OR RELOCATE ALL ITEMS (PIPING, BRACKETS, ELECTRICAL, ETC.) REQUIRED FOR INSTALLATION OF NEW METAL SIDING.

3. CONTRACTOR SHALL FRAME OUT AND INSTALL NEW LOUVER(S) AS SHOWN. SEE SECTIONS AND DETAILS FOR REQUIREMENTS.

4. CONTRACTOR SHALL REMOVE ALL CONDUIT AND WIRE FROM BUILDING EXTERIOR AND SHALL REROUTE INSIDE BUILDING. PROVIDE NEW WIRE, CONDUIT, AND JUNCTION BOXES AS REQUIRED. NO CONDUIT SHALL BE INSTALLED ON EXTERIOR OF BUILDING. COORDINATE CONDUIT ROUTING LOCATION WITH OWNER/ENGINEER. SWITCHES FOR EXTERIOR LIGHTS SHALL BE MOUNTED ON EXTERIOR OF BUILDING AS DIRECTED BY THE OWNER/ENGINEER.

5. CONTRACTOR SHALL MAKE ALL NEW WALL PENETRATIONS FOR WATER PIPING, CHEMICAL LINES, AND ANY OTHERS NECESSARY ONCE NEW METAL IS INSTALLED AND COMPLETE. WALL PENETRATIONS SHALL BE SEALED AND WATERTIGHT. CONTRACTOR SHALL PROVIDE COUPLINGS, FITTINGS, ETC. AS REQUIRED FOR RECONNECTIONS.

Municipal Consultants, Inc.
200 Century Park South, Suite 212
Birmingham, Alabama 35226
(205) 822-0387

SHELBY COUNTY COMMISSION

TALLADEGA/SHELBY WTP
BUILDING IMPROVEMENTS

2020

ALABAMA LICENSED PROFESSIONAL ENGINEER NO. 23366 JESSE L. COUSER

06/26/20

NOT VALID WITHOUT SIGNATURE

BAR = 1"

Title	ELEVATIONS
Drawing	BID SET
Project No.	
Date	6-2020
Scale	AS SHOWN
Sheet	9

COPYRIGHT © MUNICIPAL CONSULTANTS, INC.

EAST ELEVATION OF FILTER BUILDING

SCALE: N.T.S.

NOTES:

1. ALL METAL SIDING AND ROOF PANELS INDICATED SHALL BE REMOVED AND REPLACED WITH NEW METAL SIDING. COLOR SELECTED BY THE OWNER.

2. CONTRACTOR SHALL BE AWARE OF ALL ITEMS CURRENTLY MOUNTED ON THE OUTSIDE OF THE STRUCTURE. CONTRACTOR SHALL REMOVE AND REINSTALL OR RELOCATE ALL ITEMS (PIPING, BRACKETS, ELECTRICAL, ETC.) REQUIRED FOR INSTALLATION OF NEW METAL SIDING.

3. CONTRACTOR SHALL FRAME OUT AND INSTALL NEW LOUVERS AS SHOWN. SEE SECTIONS AND DETAILS FOR REQUIREMENTS.

4. CONTRACTOR SHALL REMOVE ALL UNUSED CONDUIT, WIRE, BRACKETS, ETC. FROM BUILDING EXTERIOR.

5. CONTRACTOR SHALL MAKE ALL NEW WALL PENETRATIONS FOR VENTS, PIPING, AND ANY OTHERS NECESSARY ONCE NEW METAL IS INSTALLED AND COMPLETE. WALL PENETRATIONS SHALL BE SEALED AND WATERTIGHT. CONTRACTOR SHALL PROVIDE COUPLINGS, FITTINGS, ETC. AS REQUIRED FOR RECONNECTIONS.

Municipal Consultants, Inc.
200 Century Park South, Suite 212
Birmingham, Alabama 35226
(205) 822-0387

SHELBY COUNTY COMMISSION

TALLADEGA/SHELBY WTP
BUILDING IMPROVEMENTS

2020

ALABAMA LICENSED NO. 23366 PROFESSIONAL ENGINEER JESSE S. GOUSE
06/26/20
NOT VALID WITHOUT SIGNATURE

BAR = 1"

Title	ELEVATIONS
Drawing	BID SET
Project No.	
Date	6-2020
Scale	AS SHOWN
Sheet	10

COPYRIGHT © MUNICIPAL CONSULTANTS, INC.

SOUTH ELEVATION OF FILTER BUILDING

SCALE: N.T.S.

NOTES:

1. ALL METAL SIDING AND ROOF PANELS INDICATED SHALL BE REMOVED AND REPLACED WITH NEW METAL SIDING. COLOR SELECTED BY THE OWNER.

2. CONTRACTOR SHALL BE AWARE OF ALL ITEMS CURRENTLY MOUNTED ON THE OUTSIDE OF THE STRUCTURE. CONTRACTOR SHALL REMOVE AND REINSTALL OR RELOCATE ALL ITEMS (PIPING, BRACKETS, ELECTRICAL, ETC.) REQUIRED FOR INSTALLATION OF NEW METAL SIDING.

3. CONTRACTOR SHALL FRAME OUT AND INSTALL NEW ROLL-UP DOOR(S) AND EXHAUST FAN(S) AS SHOWN. SEE SECTIONS AND DETAILS FOR REQUIREMENTS.

4. CONTRACTOR SHALL REMOVE ALL UNUSED CONDUIT, WIRE, BRACKETS, ETC. FROM BUILDING EXTERIOR.

5. CONTRACTOR SHALL MAKE ALL NEW WALL PENETRATIONS FOR WATER PIPING, CHEMICAL LINES, AIR PIPING, AND ANY OTHERS NECESSARY ONCE NEW METAL IS INSTALLED AND COMPLETE. WALL PENETRATIONS SHALL BE SEALED AND WATERTIGHT. CONTRACTOR SHALL PROVIDE COUPLINGS, FITTINGS, ETC. AS REQUIRED FOR RECONNECTIONS.

Municipal Consultants, Inc.
200 Century Park South, Suite 212
Birmingham, Alabama 35226
(205) 822-0387

SHELBY COUNTY COMMISSION

TALLADEGA/SHELBY WTP
BUILDING IMPROVEMENTS

2020

ALABAMA LICENSED PROFESSIONAL ENGINEER NO. 23366 MARK S. COUSLAND
06/26/20
NOT VALID WITHOUT SIGNATURE

BAR = 1"

Title	ELEVATIONS
Drawing	BID SET
Project No.	
Date	6-2020
Scale	AS SHOWN
Sheet	11

COPYRIGHT © MUNICIPAL CONSULTANTS, INC.

NOTES:
1. ALL WINDOWS CURRENTLY IN THE METAL SIDING SHALL BE REMOVED AND COVERED BY METAL SIDING. TYPICAL OF ALL WINDOWS THROUGHOUT EACH BUILDING. CONTRACTOR SHALL PROVIDE ALL WOOD TIMBERS TO FRAME UP WINDOWS TO PROPERLY SUPPORT SIDING.

2. CONTRACTOR SHALL PROVIDE ALL WOOD TIMBERS TO FRAME UP ALL EXISTING WINDOWS AND ALL NEW DOORS, LOUVERS, FANS, ETC. AS REQUIRED.

3. CONTRACTOR SHALL BE AWARE THAT NO EXISTING ELECTRICAL CONDUIT, FIXTURES, CONDUIT, ETC. ARE SHOWN IN THE PLAN VIEW OR SECTIONS. CONTRACTOR SHALL REMOVE AND REPLACE ALL AS REQUIRED FOR TIMBER REPLACEMENT AND METAL INSTALLATION.

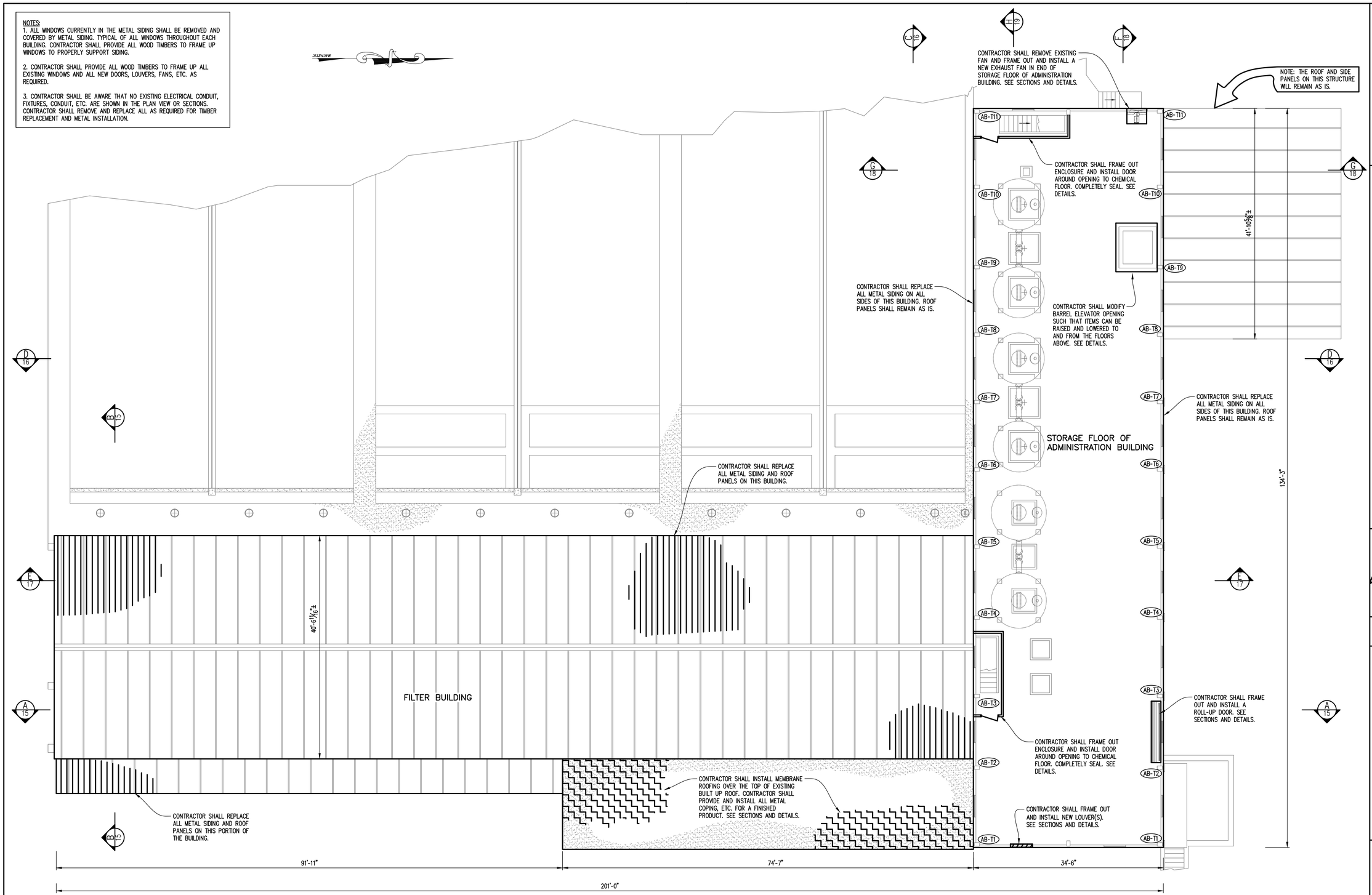

STORAGE FLOOR PLAN
SCALE: 1/8" = 1'-0"

Municipal Consultants, Inc.
200 Century Park South, Suite 212
Birmingham, Alabama 35226
(205) 822-0387

SHELBY COUNTY COMMISSION
TALLADEGA/SHELBY WTP
BUILDING IMPROVEMENTS
2020

ALABAMA LICENSED PROFESSIONAL ENGINEER NO. 23366 MARK S. COUSTE
06/26/20
NOT VALID WITHOUT SIGNATURE

BAR = 1"

Title	STORAGE FLOOR PLAN
	BID SET
Drawing	
Project No.	
Date	6-2020
Scale	1/8"=1'
Sheet	12

COPYRIGHT © MUNICIPAL CONSULTANTS, INC.

NOTES:
1. CONTRACTOR SHALL BE AWARE THAT NO EXISTING ELECTRICAL CONDUIT, FIXTURES, ETC. ARE SHOWN IN THE PLAN VIEW OR SECTIONS. CONTRACTOR SHALL COORDINATE ALL.

2. THE CHEMICAL TANK TO BE PROVIDED AND INSTALLED SHALL BE DIAMETER AND SIZE SHOWN. TANK SHALL NOT BE OVER 10' TALL. TANK SHALL BE INSULATED WITH HEAT TRACING. SEE TANK SCHEDULE FOR FITTINGS AND ACCESSORIES.

3. CONTRACTOR SHALL REMOVE EXISTING FILL PIPING TO FLUORIDE TANK AND REPLACE WITH NEW 3" SCH 80 PVC PIPING. PROVIDE A QUICK CONNECT FITTING FOR TRUCK CONNECTION. ALL EXISTING SUPPORT BRACKETS AND ROUTING MAY BE REUSED.

4. CONTRACTOR SHALL PROVIDE AND INSTALL NEW 4" OVERFLOW PIPING, VENT PIPING, AND FEED PIPING.

5. NEW VENT PIPE SHALL BE 4" SCH 80 PVC EXTENDED TO EXTERIOR OF BUILDING. CONTRACTOR SHALL INSTALL 45° ANGLE FITTING FACING DOWN WITH A 316 STAINLESS STEEL INSECT SCREEN. INSECT SCREEN SHALL BE TIGHTLY SECURED BETWEEN A PVC FLANGE AND FILLER FLANGE ATTACHED TO 45° BEND. PROVIDE WATERTIGHT SEAL AROUND WALL PENETRATION.

BULK STORAGE TANK

SYSTEM	NUMBER	MATERIAL/COLOR/S.G.	CAPACITY	MODEL (SNYDER)	DIMENSIONS	ACCESSORIES
Caustic	1	HDLPE/NAT/1.9	4,600 gallons	7000500-N	10'-0" DIA.	(1) (3) (4) (6)

(1) 3" top fill connection, 4" top vent, 2" flanged feed connection, 3" side bottom drain (S.U.MO.), 4" overflow
(2) Reserved
(3) Tank insulation and heat tracing
(4) Ultrasonic Level Indicator and Transmitter
(5) Reserved
(6) All fittings and materials to be suitable for caustic. Flanged gaskets shall be EPDM or equal.

ABBREVIATIONS:
HDLPE: HIGH DENSITY LINEAR POLYETHYLENE
NAT: NATURAL

NOTES:
1) SNYDER IS BASIS OF DESIGN.
2) SEE DRAWINGS AND SPECIFICATIONS FOR ADDITIONAL REQUIREMENTS
3) ALL FITTINGS, GASKETS, BOLTS AND MATERIALS TO BE SUITED FOR MATERIAL BEING CONTAINED

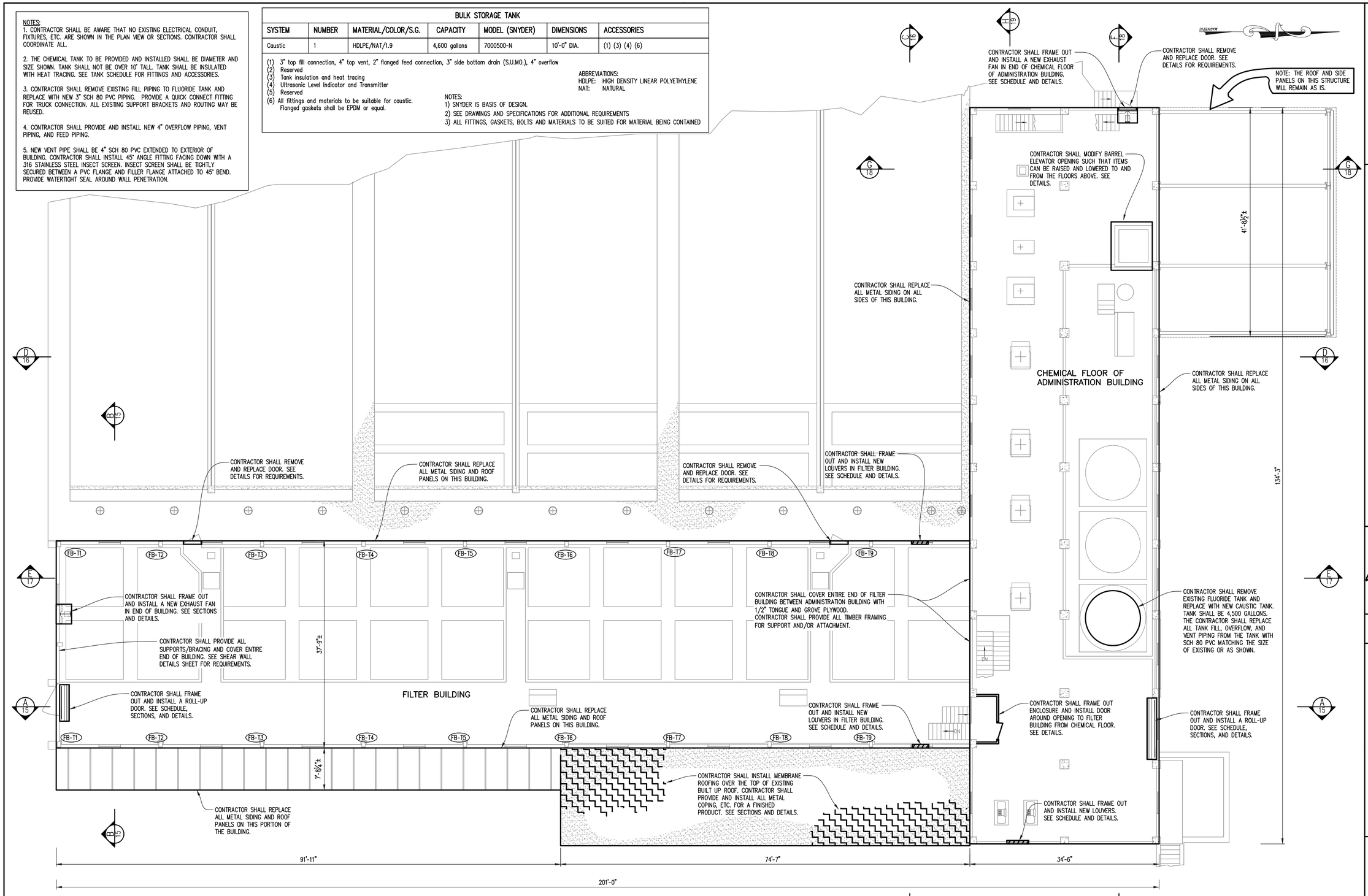

CHEMICAL FLOOR PLAN
SCALE: 1/8" = 1'-0"

Municipal Consultants, Inc.
200 Century Park South, Suite 212
Birmingham, Alabama 35226
(205) 822-0397

SHELBY COUNTY COMMISSION
TALLADEGA/SHELBY WTP
BUILDING IMPROVEMENTS
2020

ALABAMA LICENSED NO. 23356 PROFESSIONAL ENGINEER JESSE S. COUSER
06/26/20
NOT VALID WITHOUT SIGNATURE

BAR = 1"

Title	CHEMICAL FLOOR PLAN
Drawing	BID SET
Project No.	
Date	6-2020
Scale	1/8"=1'
Sheet	13

COPYRIGHT © MUNICIPAL CONSULTANTS, INC.

NOTES:
1. ALL WINDOWS CURRENTLY IN THE METAL SIDING SHALL BE REMOVED AND COVERED BY METAL SIDING, TYPICAL OF ALL WINDOWS THROUGHOUT EACH BUILDING (EXCEPT WINDOWS IN LABORATORY AND BATHROOM WALL). CONTRACTOR SHALL PROVIDE ALL WOOD TIMBERS TO FRAME UP WINDOWS TO PROPERLY SUPPORT SIDING.

2. CONTRACTOR SHALL PROVIDE ALL WOOD TIMBERS TO FRAME UP ALL DOORS, WINDOWS, LOUVERS, FANS, ETC. AS REQUIRED.

3. CONTRACTOR SHALL BE AWARE THAT NO EXISTING ELECTRICAL CONDUIT, FIXTURES, ETC. ARE SHOWN IN THE PLAN VIEW OR SECTIONS. CONTRACTOR SHALL COORDINATE ALL.

4. ON SOUTH END OF FILTER BUILDING, THE CONTRACTOR SHALL PROVIDE A BREAK IN THE METAL BELOW AND BESIDE THE ROLL-UP DOOR. THIS BREAK MAY BE USED FOR FUTURE REMOVAL OF THE METAL AT THE END OF THE FILTER PIPE GALLERY.

5. THE WINDOWS IN LABORATORY AND BATHROOM SHALL REMAIN. CONTRACTOR SHALL SEAL NEW METAL AND TRIM AROUND THESE WINDOWS AS REQUIRED. CONTRACTOR SHALL PROVIDE CAULK, SEALANT, ETC. AS RECOMMENDED BY THE METAL MANUFACTURER. SEAL AROUND THESE WINDOWS SHALL BE LEAK-TIGHT.

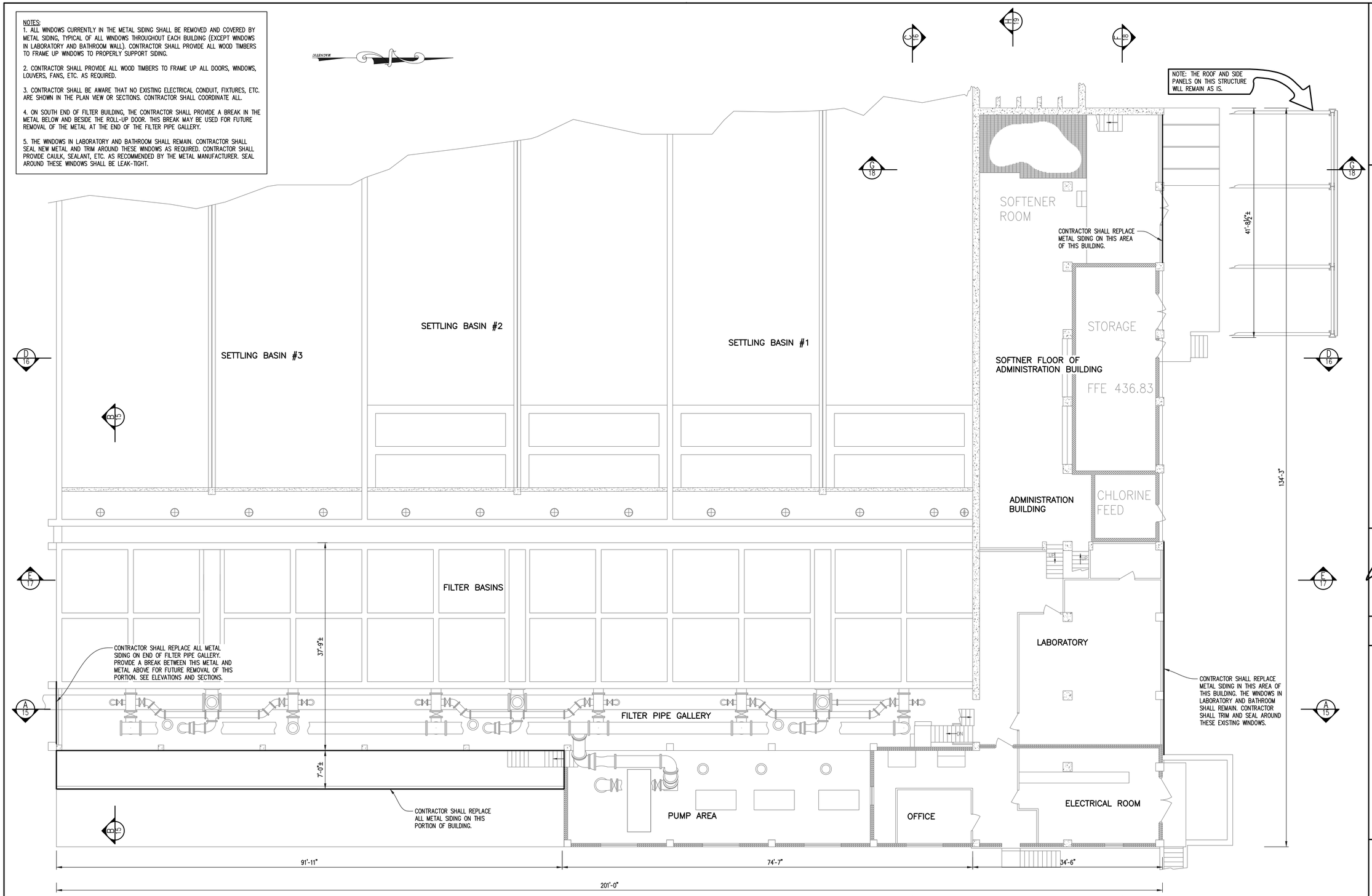

LAB, ELECTRICAL ROOM, SOFTNER, & FILTER BASIN FLOOR PLAN

SCALE: 1/8" = 1'-0"

Municipal Consultants, Inc.
200 Century Park South, Suite 212
Birmingham, Alabama 35226
(205) 822-0367

SHELBY COUNTY COMMISSION

TALLADEGA/SHELBY WTP
BUILDING IMPROVEMENTS

2020

ALABAMA LICENSED PROFESSIONAL ENGINEER NO. 23366 MISS. COUSINS

06/26/20

NOT VALID WITHOUT SIGNATURE

BAR = 1"

Title	LAB, ELECTRICAL ROOM, SOFTNER, & FILTER BASIN FLOOR PLAN
Drawing	BID SET
Project No.	
Date	6-2020
Scale	1/8"=1'
Sheet	14

COPYRIGHT © MUNICIPAL CONSULTANTS, INC.

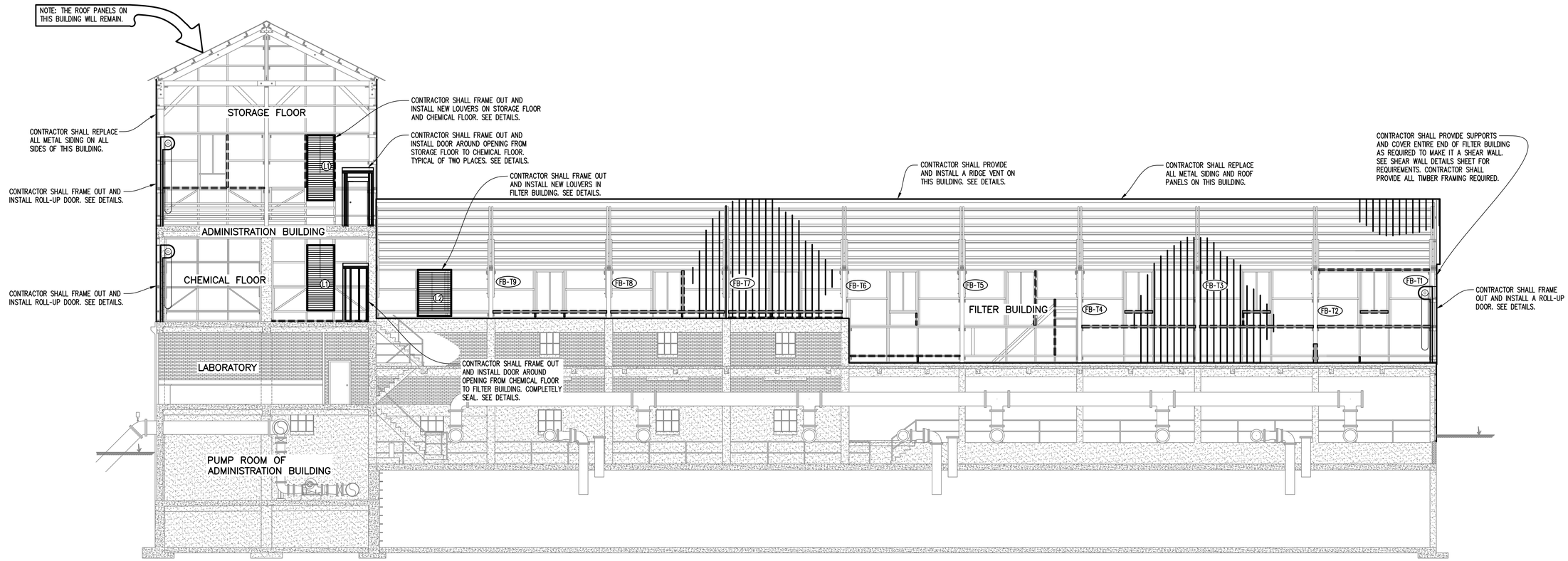

SECTION A

SCALE: 1/8" = 1'-0"

MEMBERS IDENTIFIED BY THE OWNER THAT SHALL BE REMOVED AND REPLACED.

NOTE:
SOME MEMBERS ARE TAGGED WITH A PINK DOT OR MARK IN THE FIELD. THESE MEMBERS SHALL ALSO BE REMOVED AND REPLACED ALONG WITH THE MEMBERS IDENTIFIED ON THE DRAWINGS. MARKED MEMBERS IN FIELD MAY NOT EXACTLY MATCH MEMBERS IDENTIFIED ON DRAWINGS. CONTRACTOR SHALL REMOVE AND REPLACE ALL MEMBERS IDENTIFIED OR MARKED.

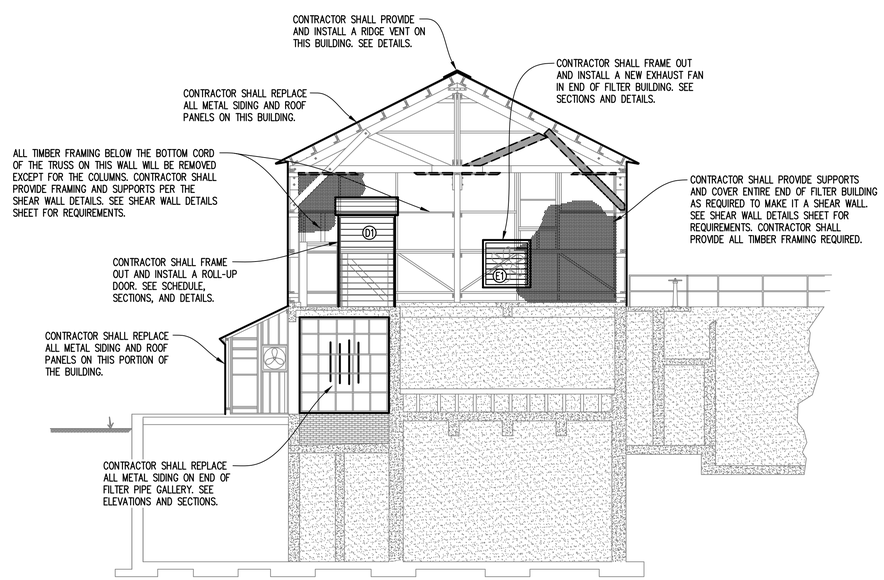

SECTION B

SCALE: 1/8" = 1'-0"

NOTES:

1. ALL WINDOWS CURRENTLY IN THE METAL SIDING SHALL BE REMOVED AND COVERED BY METAL SIDING, TYPICAL OF ALL WINDOWS THROUGHOUT EACH BUILDING. CONTRACTOR SHALL PROVIDE ALL WOOD TIMBERS TO FRAME UP WINDOWS TO PROPERLY SUPPORT SIDING.

2. CONTRACTOR SHALL PROVIDE ALL WOOD TIMBERS TO FRAME UP ALL DOORS, WINDOWS, LOUVERS, FANS, ETC. AS REQUIRED.

3. CONTRACTOR SHALL BE AWARE THAT NO EXISTING ELECTRICAL CONDUIT, FIXTURES, ETC. ARE SHOWN IN THE PLAN VIEW OR SECTIONS. CONTRACTOR SHALL COORDINATE ALL.

Municipal Consultants, Inc.
200 Century Park South, Suite 212
Birmingham, Alabama 35226
(205) 822-0387

SHELBY COUNTY COMMISSION

TALLADEGA/SHELBY WTP
BUILDING IMPROVEMENTS

2020

STATE OF ALABAMA
LICENSED
NO. 23366
PROFESSIONAL ENGINEER
MISS. COUSTON

06/26/20

NOT VALID WITHOUT SIGNATURE

BAR = 1"

Title	SECTIONS
Drawing	BID SET
Project No.	
Date	6-2020
Scale	1/8"=1'
Sheet	15

COPYRIGHT © MUNICIPAL CONSULTANTS, INC.

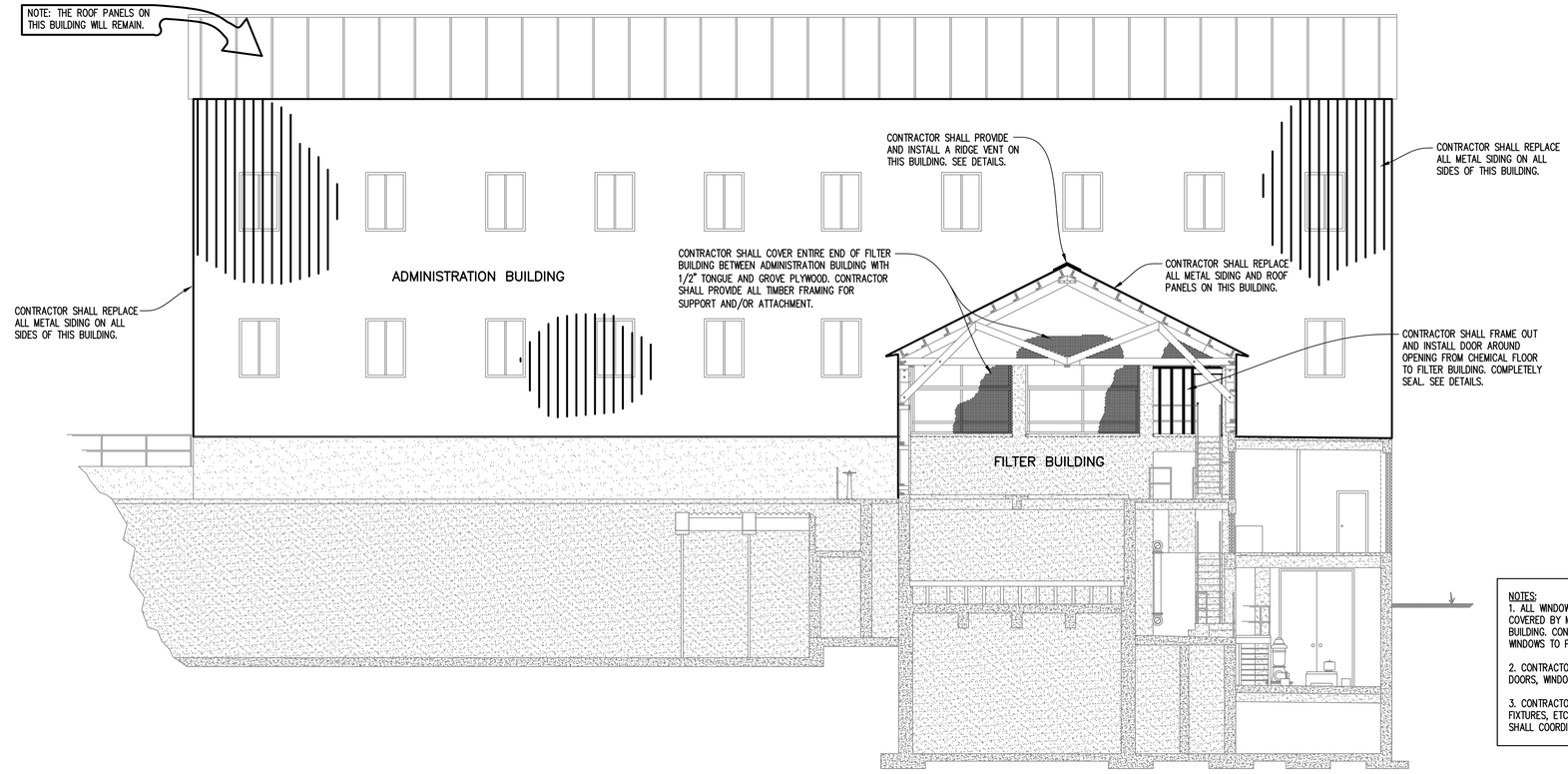

MEMBERS IDENTIFIED BY THE OWNER THAT SHALL BE REMOVED AND REPLACED.

NOTE:
SOME MEMBERS ARE TAGGED WITH A PINK DOT OR MARK IN THE FIELD. THESE MEMBERS SHALL ALSO BE REMOVED AND REPLACED ALONG WITH THE MEMBERS IDENTIFIED ON THE DRAWINGS. MARKED MEMBERS IN FIELD MAY NOT EXACTLY MATCH MEMBERS IDENTIFIED ON DRAWINGS. CONTRACTOR SHALL REMOVE AND REPLACE ALL MEMBERS IDENTIFIED OR MARKED.

NOTES:
1. ALL WINDOWS CURRENTLY IN THE METAL SIDING SHALL BE REMOVED AND COVERED BY METAL SIDING, TYPICAL OF ALL WINDOWS THROUGHOUT EACH BUILDING. CONTRACTOR SHALL PROVIDE ALL WOOD TIMBERS TO FRAME UP WINDOWS TO PROPERLY SUPPORT SIDING.

2. CONTRACTOR SHALL PROVIDE ALL WOOD TIMBERS TO FRAME UP ALL DOORS, WINDOWS, LOUVERS, FANS, ETC. AS REQUIRED.

3. CONTRACTOR SHALL BE AWARE THAT NO EXISTING ELECTRICAL CONDUIT, FIXTURES, ETC. ARE SHOWN IN THE PLAN VIEW OR SECTIONS. CONTRACTOR SHALL COORDINATE ALL.

SECTION C
SCALE: 1/8" = 1'-0"

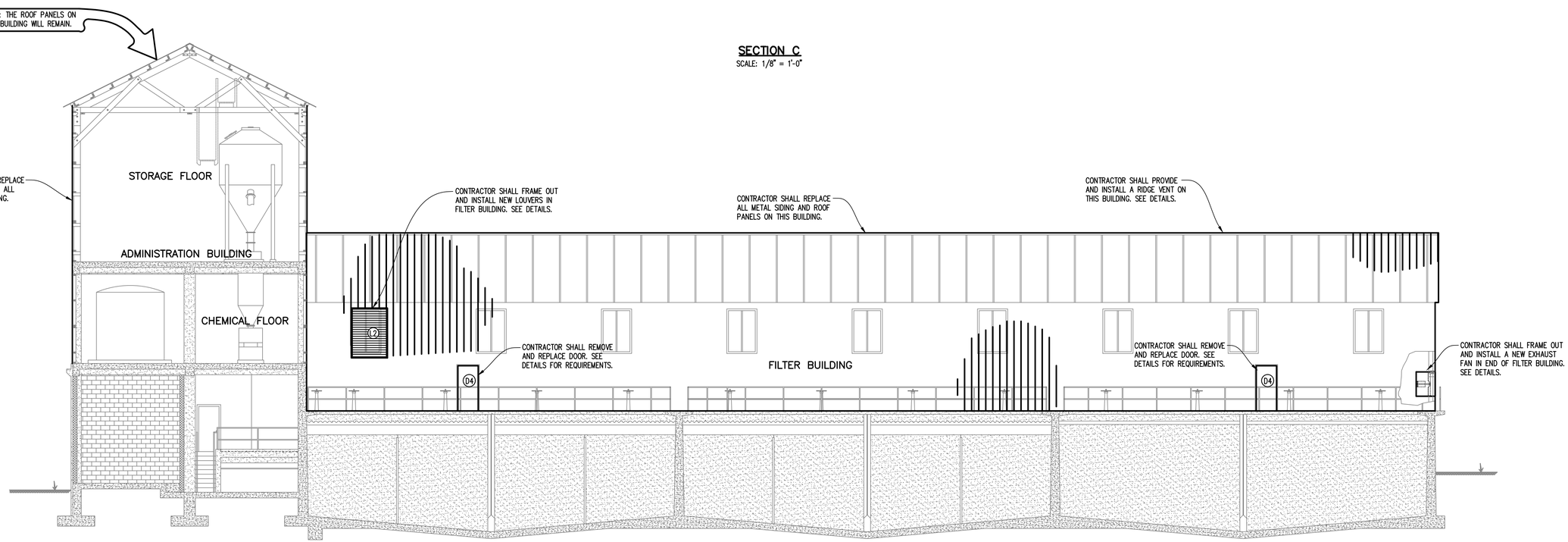

SECTION D
SCALE: 1/8" = 1'-0"

Municipal Consultants, Inc.
200 Century Park South, Suite 212
Birmingham, Alabama 35226
(205) 822-0387

SHELBY COUNTY COMMISSION

TALLADEGA/SHELBY WTP
BUILDING IMPROVEMENTS

2020

ALABAMA LICENSED No. 23366 PROFESSIONAL ENGINEER CHRISTOPHER S. COUSLER

06/26/20

NOT VALID WITHOUT SIGNATURE

BAR = 1"

Title	SECTIONS
Drawing	BID SET
Project No.	
Date	6-2020
Scale	1/8"=1'
Sheet	16

COPYRIGHT © MUNICIPAL CONSULTANTS, INC.

MEMBERS IDENTIFIED BY THE OWNER THAT SHALL BE REMOVED AND REPLACED.

NOTE:
SOME MEMBERS ARE TAGGED WITH A PINK DOT OR MARK IN THE FIELD. THESE MEMBERS SHALL ALSO BE REMOVED AND REPLACED ALONG WITH THE MEMBERS IDENTIFIED ON THE DRAWINGS. MARKED MEMBERS IN FIELD MAY NOT EXACTLY MATCH MEMBERS IDENTIFIED ON DRAWINGS. CONTRACTOR SHALL REMOVE AND REPLACE ALL MEMBERS IDENTIFIED OR MARKED.

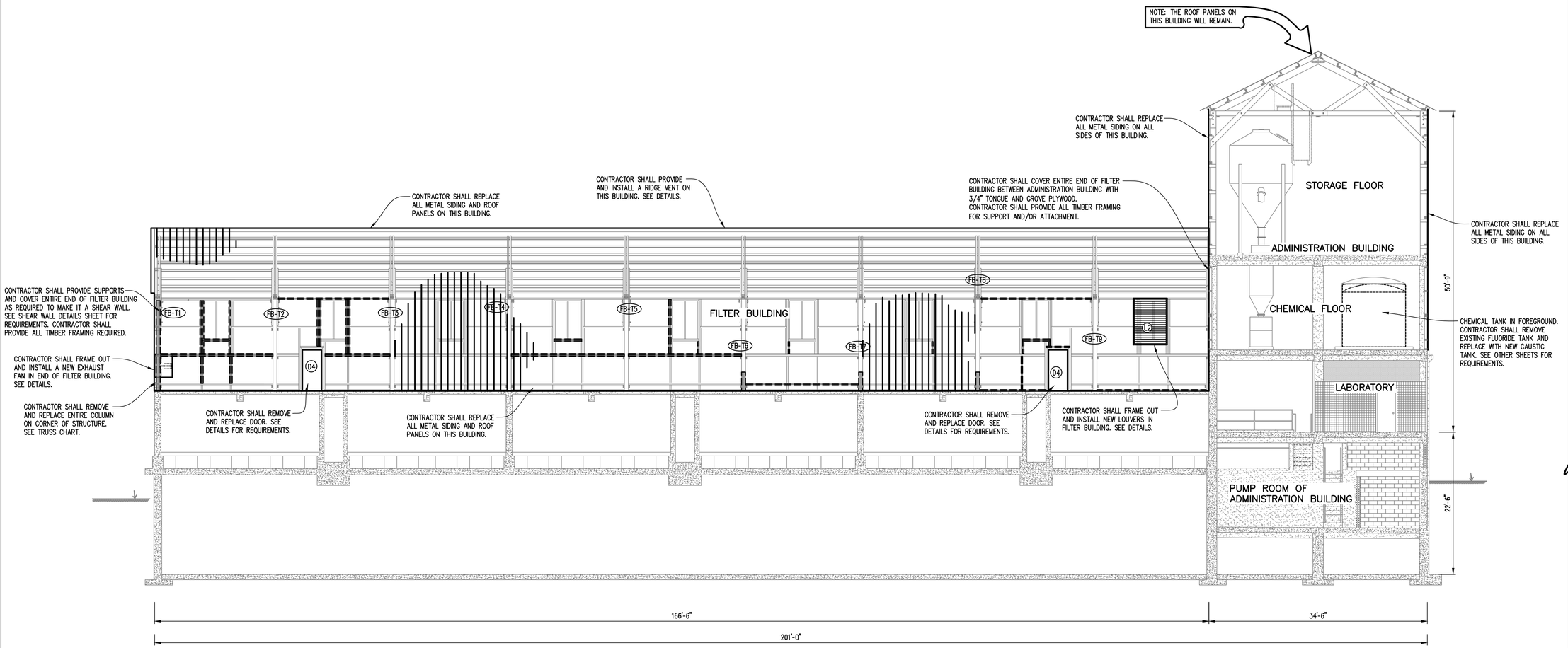

SECTION E
SCALE: 1/8" = 1'-0"

NOTES:
1. ALL WINDOWS CURRENTLY IN THE METAL SIDING SHALL BE REMOVED AND COVERED BY METAL SIDING, TYPICAL OF ALL WINDOWS THROUGHOUT EACH BUILDING. CONTRACTOR SHALL PROVIDE ALL WOOD TIMBERS TO FRAME UP WINDOWS TO PROPERLY SUPPORT SIDING.

2. CONTRACTOR SHALL PROVIDE ALL WOOD TIMBERS TO FRAME UP ALL DOORS, WINDOWS, LOUVERS, FANS, ETC. AS REQUIRED.

3. CONTRACTOR SHALL BE AWARE THAT NO EXISTING ELECTRICAL CONDUIT, FIXTURES, ETC. ARE SHOWN IN THE PLAN VIEW OR SECTIONS. CONTRACTOR SHALL COORDINATE ALL.

Municipal Consultants, Inc.
200 Century Park South, Suite 212
Birmingham, Alabama 35226
(205) 822-0387

SHELBY COUNTY COMMISSION

TALLADEGA/SHELBY WTP
BUILDING IMPROVEMENTS

2020

ALABAMA LICENSED PROFESSIONAL ENGINEER NO. 23368 MARK S. COUSIN

06/26/20

NOT VALID WITHOUT SIGNATURE

BAR = 1"

Title	SECTIONS
Drawing	BID SET
Project No.	
Date	6-2020
Scale	1/8"=1'
Sheet	17

COPYRIGHT © MUNICIPAL CONSULTANTS, INC.

MEMBERS IDENTIFIED BY THE OWNER THAT SHALL BE REMOVED AND REPLACED.

NOTE:
SOME MEMBERS ARE TAGGED WITH A PINK DOT OR MARK IN THE FIELD. THESE MEMBERS SHALL ALSO BE REMOVED AND REPLACED ALONG WITH THE MEMBERS IDENTIFIED ON THE DRAWINGS. MARKED MEMBERS IN FIELD MAY NOT EXACTLY MATCH MEMBERS IDENTIFIED ON DRAWINGS. CONTRACTOR SHALL REMOVE AND REPLACE ALL MEMBERS IDENTIFIED OR MARKED.

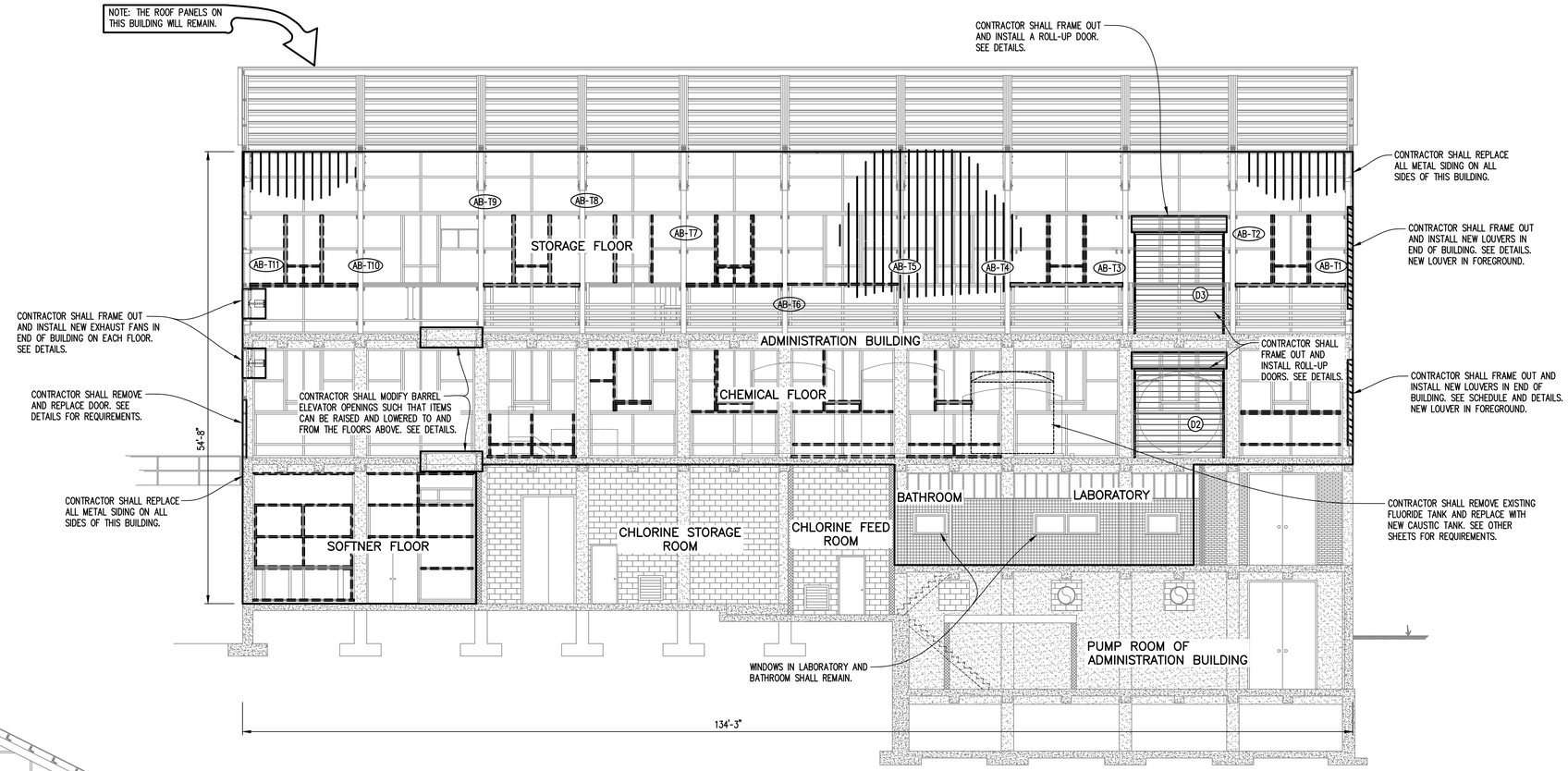

SECTION F
SCALE: 1/8" = 1'-0"

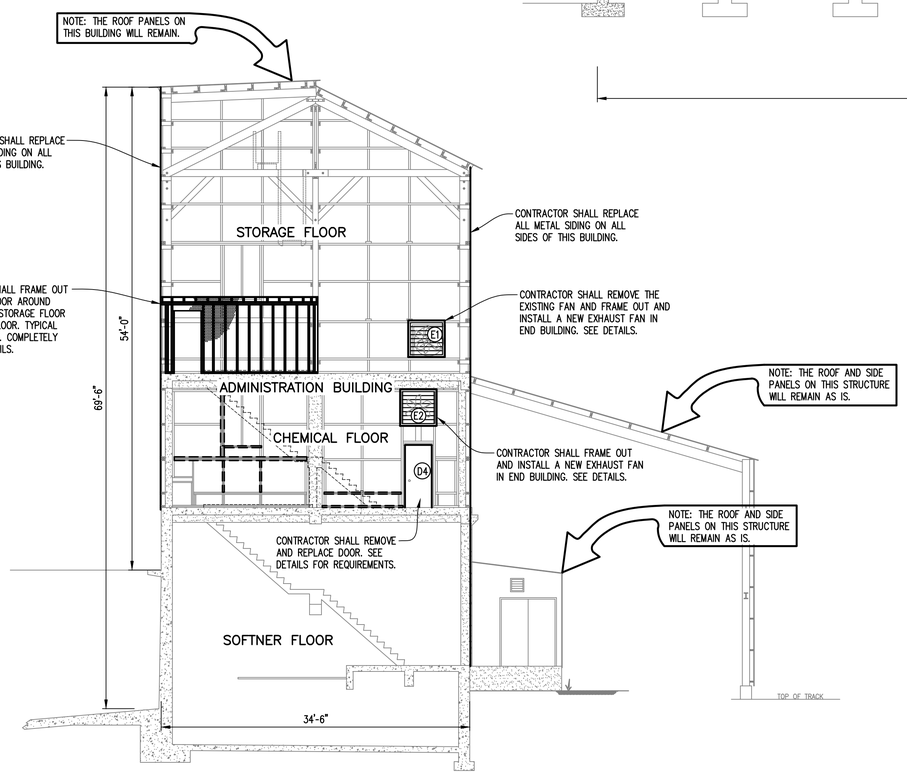

SECTION G
SCALE: 1/8" = 1'-0"

NOTES:
1. ALL WINDOWS CURRENTLY IN THE METAL SIDING SHALL BE REMOVED AND COVERED BY METAL SIDING, TYPICAL OF ALL WINDOWS THROUGHOUT EACH BUILDING. CONTRACTOR SHALL PROVIDE ALL WOOD TIMBERS TO FRAME UP WINDOWS TO PROPERLY SUPPORT SIDING.

2. CONTRACTOR SHALL PROVIDE ALL WOOD TIMBERS TO FRAME UP ALL DOORS, WINDOWS, LOUVERS, FANS, ETC. AS REQUIRED.

3. CONTRACTOR SHALL BE AWARE THAT NO EXISTING ELECTRICAL CONDUIT, FIXTURES, ETC. ARE SHOWN IN THE PLAN VIEW OR SECTIONS. CONTRACTOR SHALL COORDINATE ALL.

Municipal Consultants, Inc.
200 Century Park South, Suite 212
Birmingham, Alabama 35226
(205) 822-0387

SHELBY COUNTY COMMISSION

TALLADEGA/SHELBY WTP
BUILDING IMPROVEMENTS

2020

ALABAMA LICENSED PROFESSIONAL ENGINEER NO. 23366 JAMES S. COUSIN
06/26/20
NOT VALID WITHOUT SIGNATURE

BAR = 1"

Title	SECTIONS
Drawing	BID SET
Project No.	
Date	6-2020
Scale	1/8"=1'
Sheet	18

COPYRIGHT © MUNICIPAL CONSULTANTS, INC.

MEMBERS IDENTIFIED BY THE OWNER THAT SHALL BE REMOVED AND REPLACED.

NOTE:
SOME MEMBERS ARE TAGGED WITH A PINK DOT OR MARK IN THE FIELD. THESE MEMBERS SHALL ALSO BE REMOVED AND REPLACED ALONG WITH THE MEMBERS IDENTIFIED ON THE DRAWINGS. MARKED MEMBERS IN FIELD MAY NOT EXACTLY MATCH MEMBERS IDENTIFIED ON DRAWINGS. CONTRACTOR SHALL REMOVE AND REPLACE ALL MEMBERS IDENTIFIED OR MARKED.

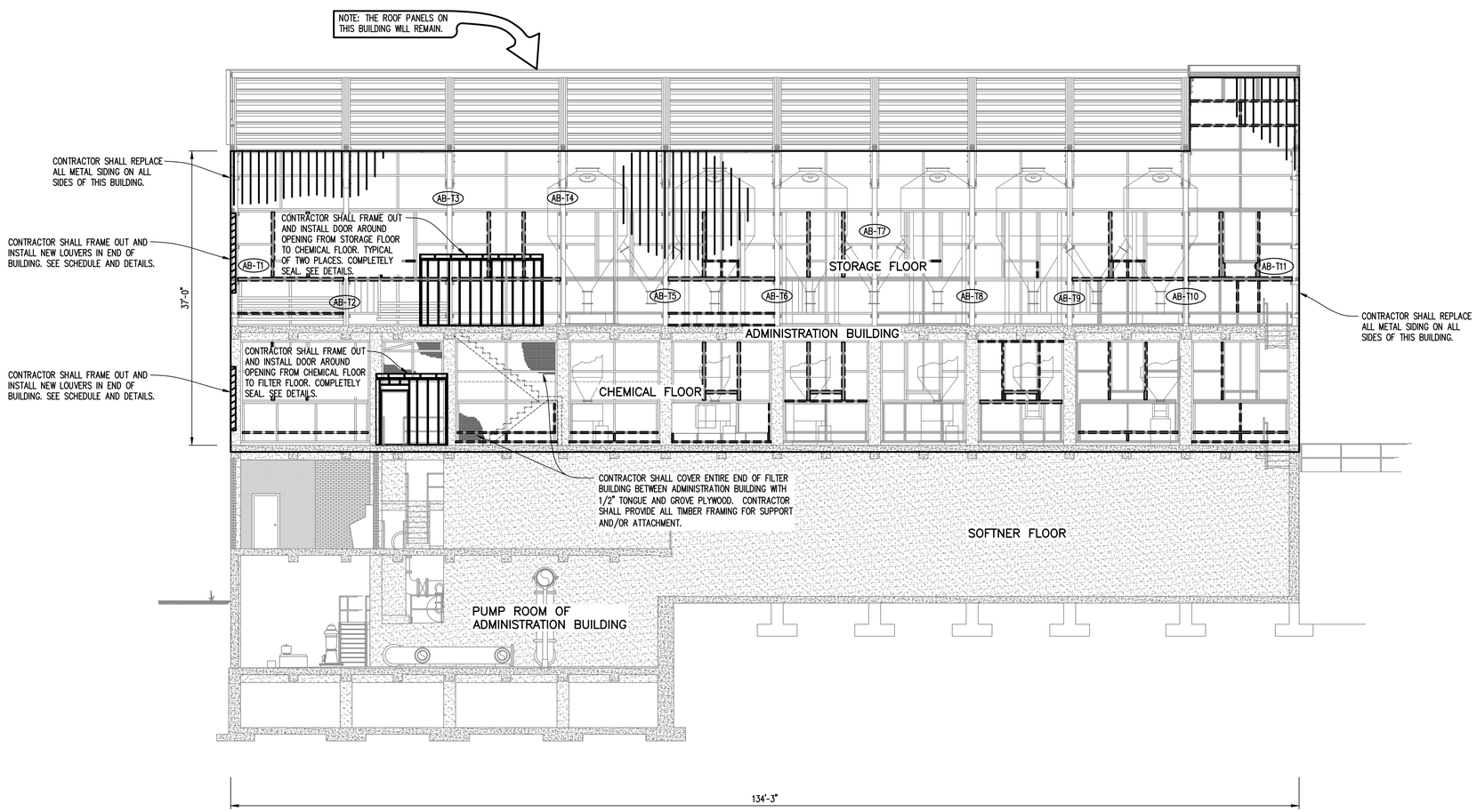

SECTION H
SCALE: 1/8" = 1'-0"

NOTES:
1. ALL WINDOWS CURRENTLY IN THE METAL SIDING SHALL BE REMOVED AND COVERED BY METAL SIDING, TYPICAL OF ALL WINDOWS THROUGHOUT EACH BUILDING. CONTRACTOR SHALL PROVIDE ALL WOOD TIMBERS TO FRAME UP WINDOWS TO PROPERLY SUPPORT SIDING.

2. CONTRACTOR SHALL PROVIDE ALL WOOD TIMBERS TO FRAME UP ALL DOORS, WINDOWS, LOUVERS, FANS, ETC. AS REQUIRED.

3. CONTRACTOR SHALL BE AWARE THAT NO EXISTING ELECTRICAL CONDUIT, FIXTURES, ETC. ARE SHOWN IN THE PLAN VIEW OR SECTIONS. CONTRACTOR SHALL COORDINATE ALL.

Municipal Consultants, Inc.
200 Century Park South, Suite 212
Birmingham, Alabama 35226
(205) 822-0387

SHELBY COUNTY COMMISSION

TALLADEGA/SHELBY WTP
BUILDING IMPROVEMENTS

2020

ALABAMA LICENSED PROFESSIONAL ENGINEER NO. 23366 MARK S. COLE
06/26/20
NOT VALID WITHOUT SIGNATURE

BAR = 1"

Title	SECTIONS
Drawing	BID SET
Project No.	
Date	6-2020
Scale	1/8"=1'
Sheet	19

COPYRIGHT © MUNICIPAL CONSULTANTS, INC.

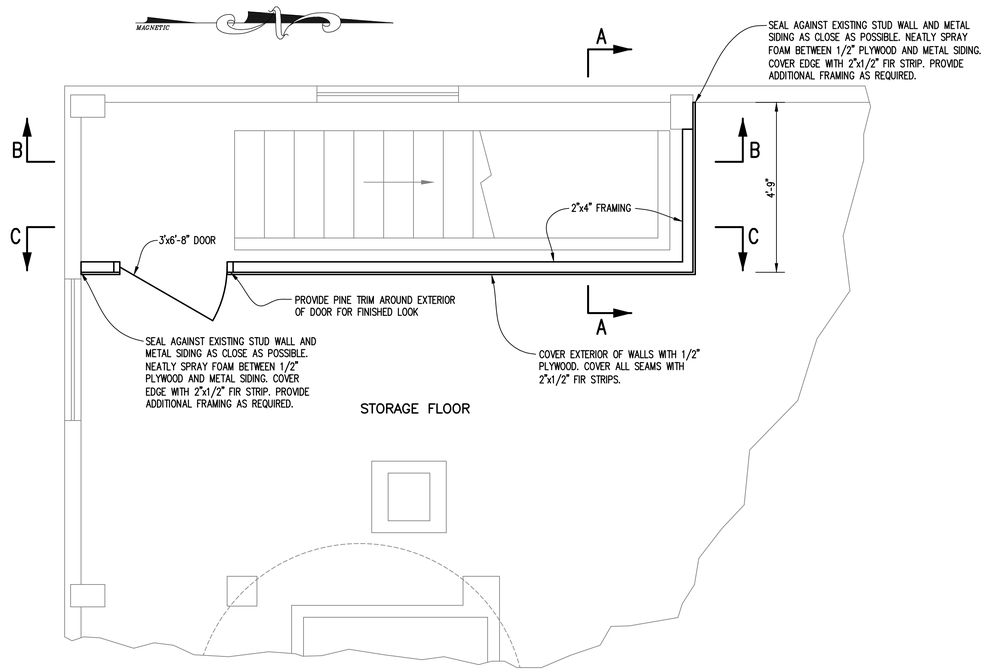

PLAN VIEW
SCALE: 1/2" = 1'-0"

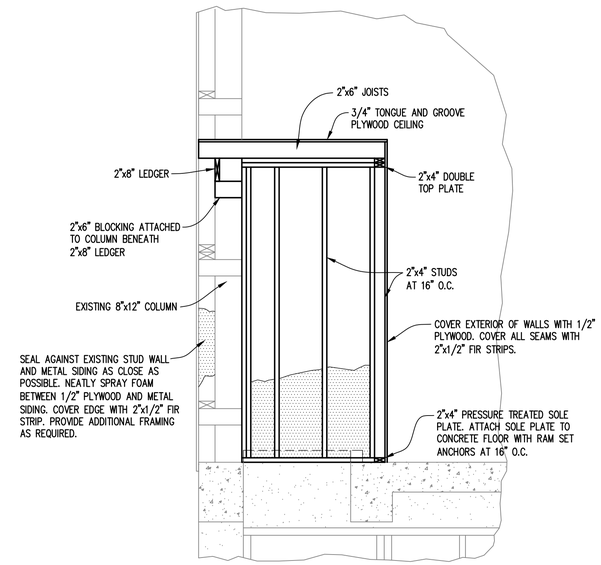

SECTION A–A
SCALE: 1/2" = 1'-0"

NOTES:

1. THESE PLANS AND SECTIONS ARE SHOWN AS A GENERIC DETAIL AND MAY NOT SHOW ALL FRAMING AND SUPPORTS REQUIRED. THE CONTRACTOR SHALL PROVIDE ALL ADDITIONAL FRAMING AND SUPPORTS AS REQUIRED.

2. THESE PLANS AND SECTIONS APPLY TO ALL THREE AREAS SHOWN ON THE DRAWINGS TO BE COVERED OR ENCLOSED ON THE STORAGE FLOOR AND CHEMICAL FLOOR OF THE ADMINISTRATION BUILDING. MODIFY AS REQUIRED FOR ENCLOSURE SIZE AND LOCATION.

3. CONTRACTOR SHALL PROVIDE ALL MATERIALS REQUIRED.

4. MATERIALS MAY BE NON-TREATED PINE LUMBER AND PLYWOOD. THE SOLE PLATE AND OTHER WOOD IN CONTACT WITH THE CONCRETE SHALL BE PRESSURE TREATED LUMBER.

5. CONTRACTOR SHALL SEAL EDGES OF ENCLOSURE TO FULLEST EXTENT POSSIBLE. PROVIDE ALL SEALING MATERIALS AS REQUIRED.

6. CONTRACTOR SHALL PROVIDE 2"x1/2" FIR STRIPS OVER ALL SEAMS, JOINTS, AND CORNERS. SEAMS AND JOINTS ON CEILING DO NOT HAVE TO BE COVERED.

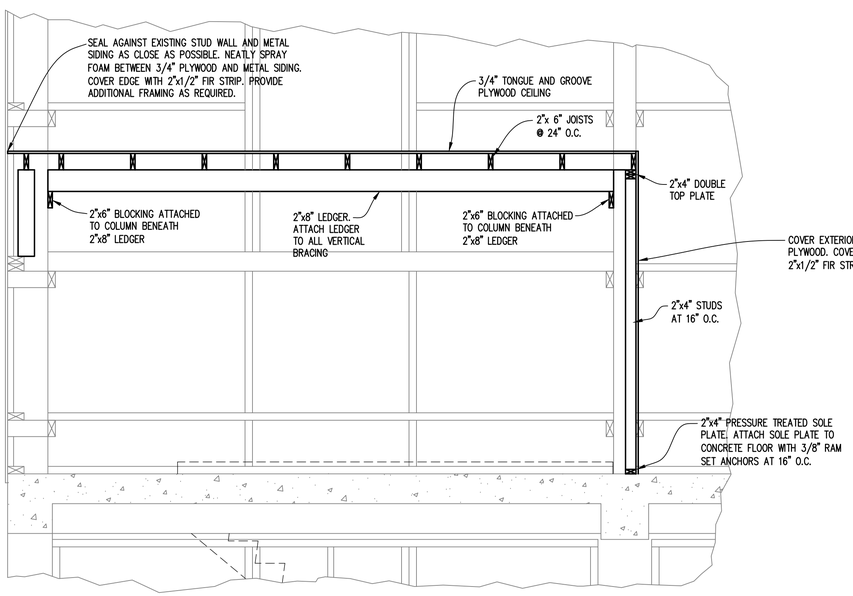

SECTION B–B
SCALE: 1/2" = 1'-0"

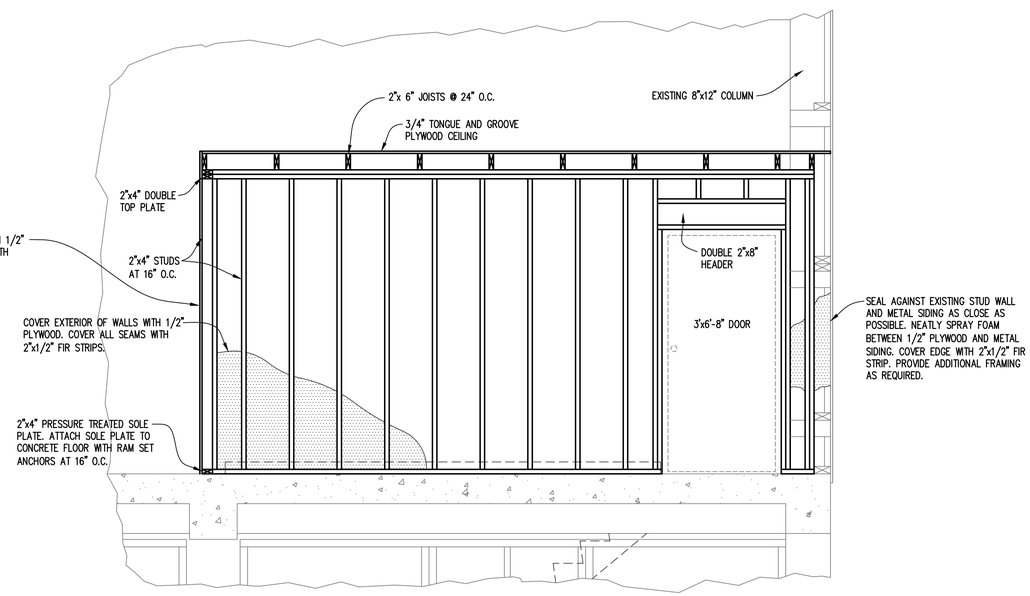

SECTION C–C
SCALE: 1/2" = 1'-0"

Municipal Consultants, Inc.
200 Century Park South, Suite 212
Birmingham, Alabama 35226
(205) 822-0387

SHELBY COUNTY COMMISSION

TALLADEGA/SHELBY WTP
BUILDING IMPROVEMENTS

2020

STATE OF ALABAMA
LICENSED
NO. 23366
PROFESSIONAL ENGINEER
MARK S. COUSINS

06/26/20

NOT VALID WITHOUT SIGNATURE

BAR = 1"

Title	OPENING ENCLOSURE FRAMING DETAILS
Drawing	BID SET
Project No.	
Date	6–2020
Scale	1/4"=1'
Sheet	20

COPYRIGHT © MUNICIPAL CONSULTANTS, INC.

ROLL-UP DOOR SCHEDULE

DESIGNATION	NOMINAL DOOR (D) OR ROUGH OPENING (R)	DOOR & FRAME		HARDWARE
		FINISH	FINISH COLOR	
D1	6'-0" x 10'-0" (R)	ANODIZED	AS SELECTED BY OWNER	CHAIN OPERATED WITH LOCKING MECHANISM
D2	10'-6" x 10'-6" (R)	ANODIZED	AS SELECTED BY OWNER	CHAIN OPERATED WITH LOCKING MECHANISM
D3	10'-6" x 12'-0" (R)	ANODIZED	AS SELECTED BY OWNER	CHAIN OPERATED WITH LOCKING MECHANISM

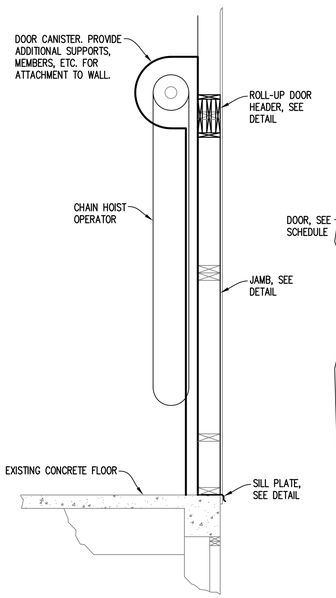

TYPICAL SECTION
SCALE: 1/2" = 1'-0"

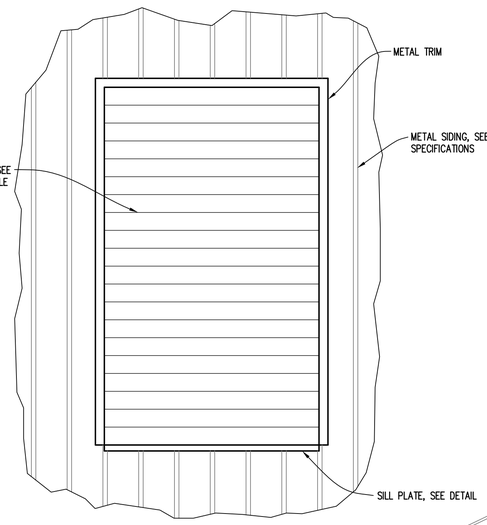

TYPICAL EXTERIOR ELEVATION
SCALE: 1/2" = 1'-0"

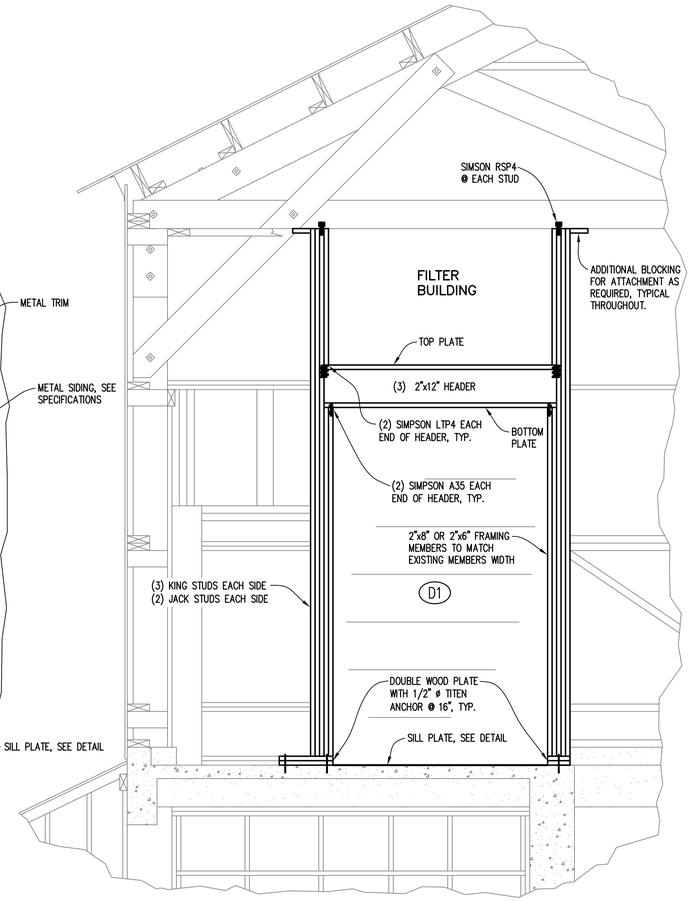

D1 INTERIOR ELEVATION
SCALE: 1/2" = 1'-0"

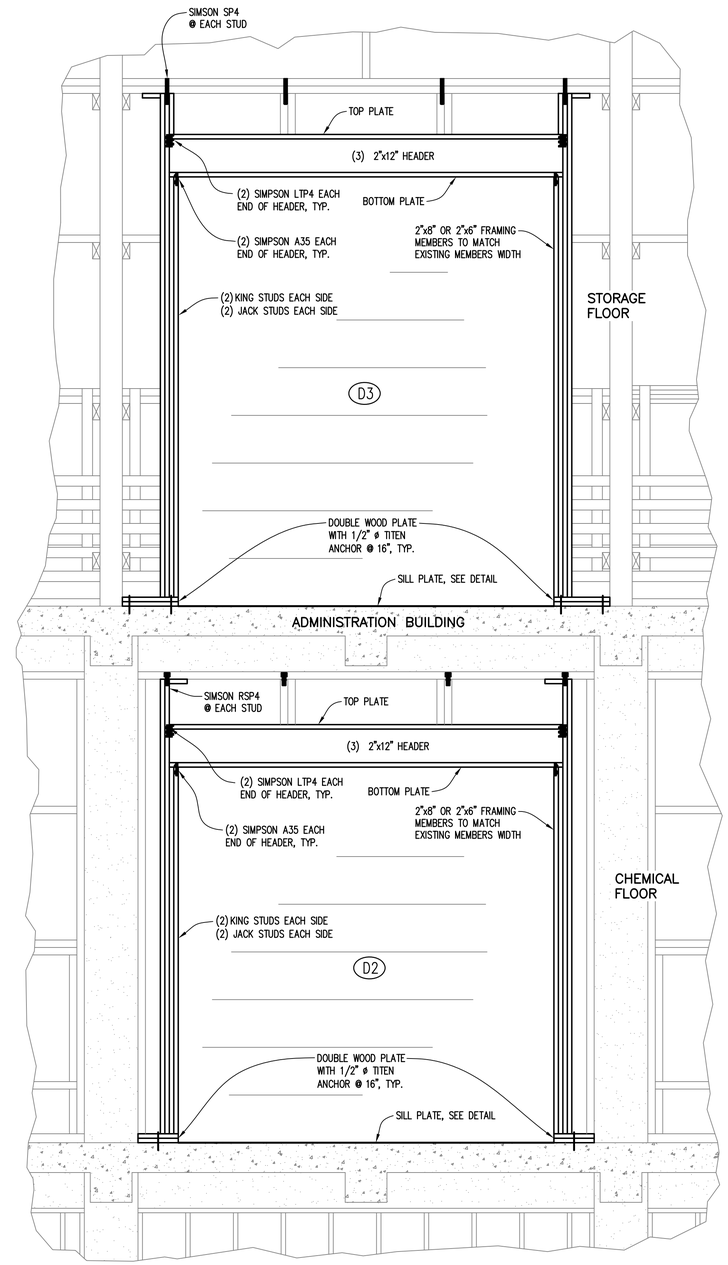

D2 & D3 INTERIOR ELEVATION
SCALE: 1/2" = 1'-0"

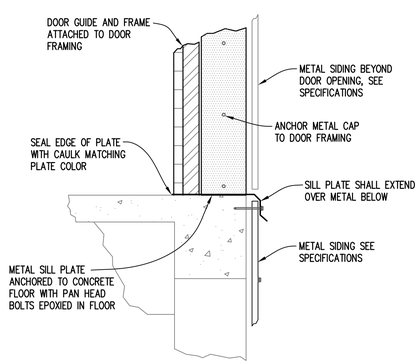

TYPICAL SILL DETAIL
SCALE: 1" = 1'-0"

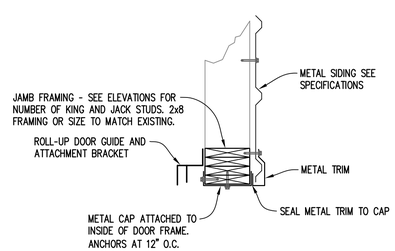

TYPICAL JAMB DETAIL
SCALE: 1" = 1'-0"

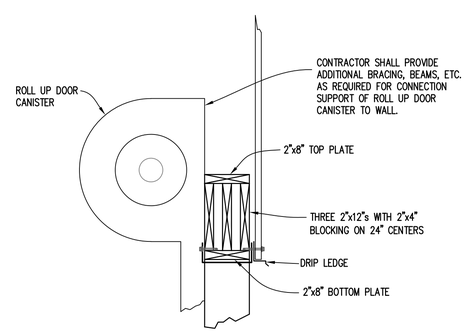

TYPICAL HEAD DETAIL
SCALE: 1" = 1'-0"

NOTES:

1. THESE PLANS AND SECTIONS APPLY TO ALL THREE AREAS TO HAVE ROLL-UP DOORS. MODIFY AS REQUIRED.
2. CONTRACTOR SHALL PROVIDE ALL MATERIALS REQUIRED.
3. MATERIALS SHALL BE NON-TREATED PINE LUMBER OF SAME WIDTH AS EXISTING WALL MEMBERS.
4. ALL WOOD IN CONTACT WITH THE CONCRETE SHALL BE PRESSURE TREATED LUMBER.

Municipal Consultants, Inc.
200 Century Park South, Suite 212
Birmingham, Alabama 35226
(205) 822-0387

SHELBY COUNTY COMMISSION

TALLADEGA/SHELBY WTP BUILDING IMPROVEMENTS

2020

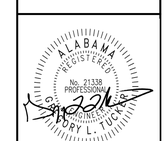

BAR = 1"

Title	ROLL-UP DOOR SCHEDULE AND DETAILS
Drawing	BID SET
Project No.	
Date	6-2020
Scale	1/4"=1'
Sheet	21

COPYRIGHT © MUNICIPAL CONSULTANTS, INC.

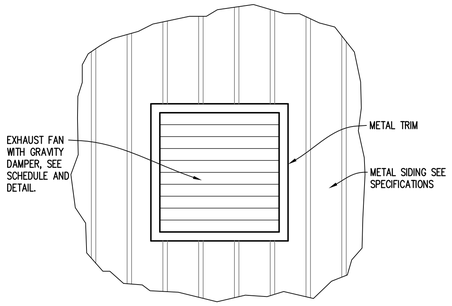

TYPICAL EXTERIOR ELEVATION

SCALE: 1/2" = 1'-0"

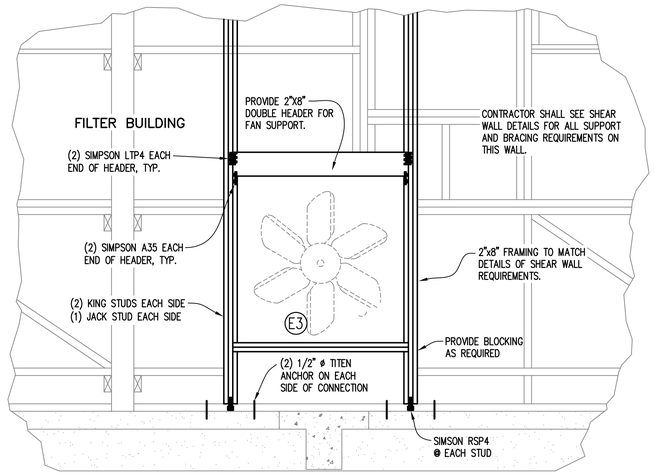

FILTER BUILDING EXHAUST FAN – INTERIOR ELEVATION

SCALE: 1/2" = 1'-0"

NOTE:
THIS PORTION OF DRAWING IS NOT BY TUCKER-JONES ENGINEERS ASSOCIATED, P.C.

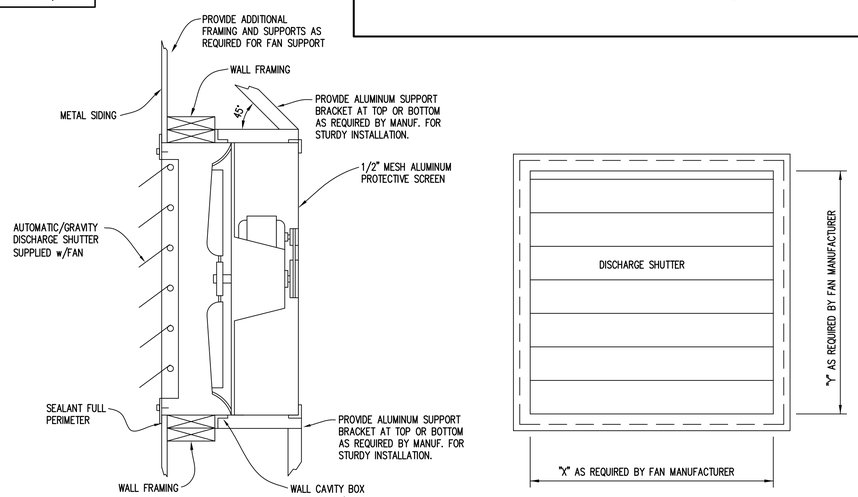

DETAIL - WALL VENTILATOR WITH DISCHARGE SHUTTER

SCALE: NONE

EXHAUSTER/FAN SCHEDULE

NOTE: CONTRACTOR IS TO VERIFY ALL OPENING SIZES WITH MANUFACTURER.

DESIGNATION	QTY.	ROUGH OPENING DIMENSIONS	TYPE/DESCRIPTION	CFM	S.P. IN W.C.	VOLTS/ PHASE	MIN. HP	FINISH COLOR	COMMENTS/ NOTES
E1	1	49.5" x 49.5"	LOREN COOK MODEL 36EP614B OR EQUAL	10,202	0.25	208/3	1.5	SELECTED BY OWNER	ALL FAN COMPONENTS SHALL HAVE AN ELECTROSTATICALLY BAKED POLYESTER POWDER COATING. COATING SHALL BE APPLIED BY FAN MANUFACTURER. FINISH COLOR TO BE SELECTED BY OWNER.
E2	1	49.5" x 49.5"	LOREN COOK MODEL 36EP424B OR EQUAL	11,461	0.25	208/3	1.5	SELECTED BY OWNER	ALL FAN COMPONENTS SHALL HAVE AN ELECTROSTATICALLY BAKED POLYESTER POWDER COATING. COATING SHALL BE APPLIED BY FAN MANUFACTURER. FINISH COLOR TO BE SELECTED BY OWNER.
E3	1	55.5" x 55.5"	LOREN COOK MODEL 42EP424B OR EQUAL	22,836	0.25	208/3	5	SELECTED BY OWNER	ALL FAN COMPONENTS SHALL HAVE AN ELECTROSTATICALLY BAKED POLYESTER POWDER COATING. COATING SHALL BE APPLIED BY FAN MANUFACTURER. FINISH COLOR TO BE SELECTED BY OWNER.

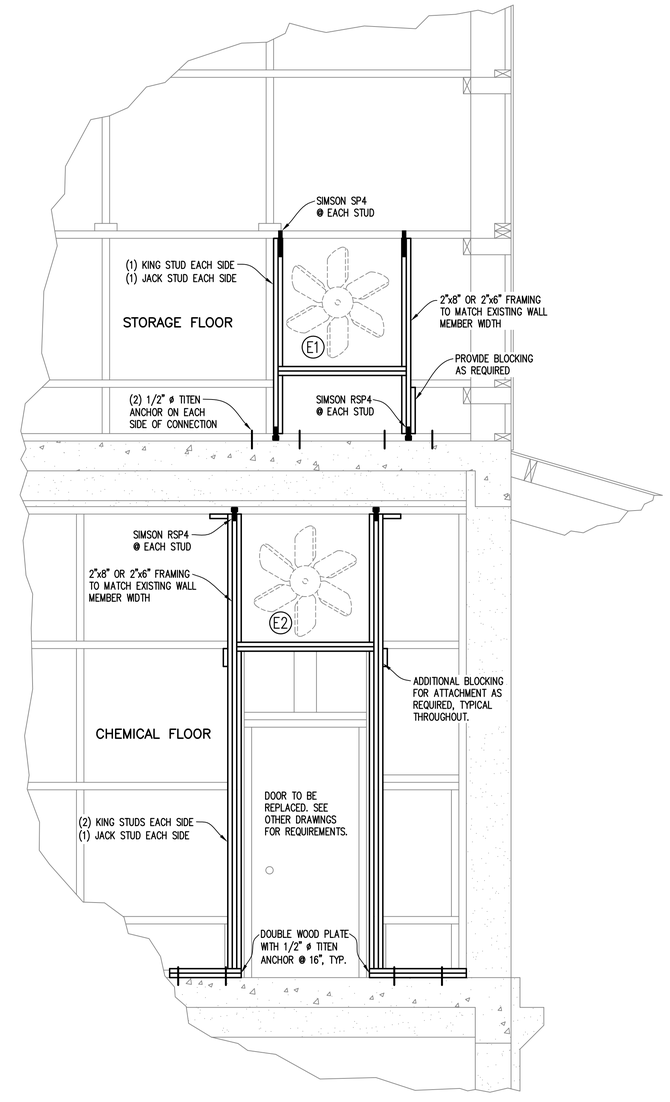

STORAGE FLOOR AND CHEMICAL FLOOR EXHAUST FANS – INTERIOR ELEVATION

SCALE: 1/2" = 1'-0"

NOTES:

1. THESE PLANS AND SECTIONS APPLY TO ALL THREE AREAS TO HAVE EXHAUST FANS. MODIFY AS REQUIRED FOR EACH FAN LOCATION.

2. CONTRACTOR SHALL PROVIDE ALL MATERIALS REQUIRED.

3. MATERIALS SHALL BE NON-TREATED PINE LUMBER OF SAME WIDTH AS EXISTING WALL MEMBERS.

4. ALL WOOD IN CONTACT WITH THE CONCRETE SHALL BE PRESSURE TREATED LUMBER.

Municipal Consultants, Inc.
200 Century Park South, Suite 212
Birmingham, Alabama 35226
(205) 822-0387

SHELBY COUNTY COMMISSION

TALLADEGA/SHELBY WTP
BUILDING IMPROVEMENTS

2020

BAR = 1"

Title: EXHAUST FAN SCHEULE AND DETAILS

BID SET

Drawing
Project No.
Date 6-2020
Scale AS SHOWN
Sheet 22

COPYRIGHT © MUNICIPAL CONSULTANTS, INC.

LOUVER SCHEDULE

NOTE: PROVIDE REMOVABLE INSECT SCREENS ON ALL LOUVERS. CONTRACTOR IS TO ENSURE THAT LOUVERS DO NOT INTERFERE W/OTHER ITEMS OF WORK

* FIELD VERIFY ALL LOUVER OPENING DEMINSIONS

DESIGNATION	QTY.	ROUGH OPENING DIMENSIONS* W X H	MODEL (RUSKIN)	DESCRIPTION	FINISH/COLOR (RUSKIN)	COMMENTS/NOTES
L1	2	48" x 120"	ELC6375DAX	ALUMINUM FIXED LOUVER	KYNAR/SELECTED BY OWNER	ANCHOR LOUVERS FIRMLY ON ALL SIDES & WEATHERPROOF.
L2	2	60" x 84"	ELC6375DAX	ALUMINUM FIXED LOUVER	KYNAR/SELECTED BY OWNER	ANCHOR LOUVERS FIRMLY ON ALL SIDES & WEATHERPROOF.

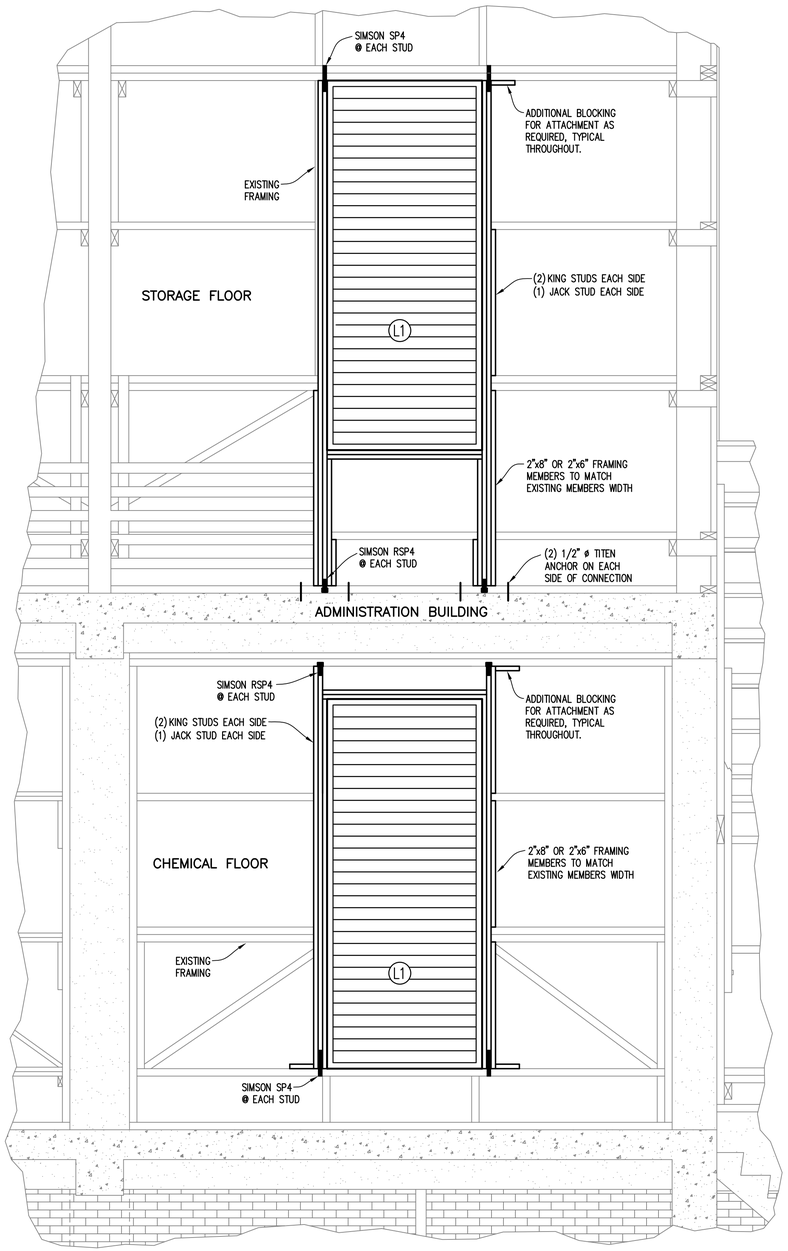

STORAGE FLOOR AND CHEMICAL FLOOR LOUVER – INTERIOR ELEVATION

SCALE: 1/2" = 1'-0"

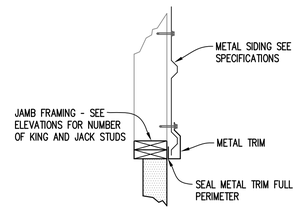

TYPICAL JAMB DETAIL

SCALE: 1" = 1'-0"

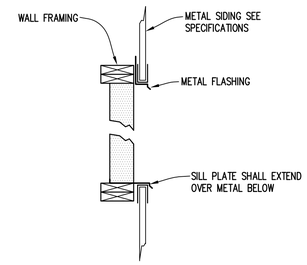

TYPICAL HEAD AND SILL DETAIL

SCALE: 1" = 1'-0"

NOTES:

1. THESE PLANS AND SECTIONS APPLY TO ALL AREAS TO HAVE LOUVERS. MODIFY AS REQUIRED FOR EACH LOUVER SIZE AND LOCATION.
2. CONTRACTOR SHALL PROVIDE ALL MATERIALS REQUIRED.
3. MATERIALS SHALL BE NON-TREATED PINE LUMBER OF SAME WIDTH AS EXISTING WALL MEMBERS.
4. ALL WOOD IN CONTACT WITH THE CONCRETE SHALL BE PRESSURE TREATED LUMBER.
5. CONTRACTOR SHALL FOLLOW LOUVER MANUFACTURER'S INSTALLATION INSTRUCTIONS AND RECOMMENDATIONS. PROVIDE ALL MATERIALS REQUIRED FOR PROPER SEALING EDGES OF LOUVER. SEALING MATERIALS SHOULD MATCH LOUVER OR TRIM MATERIAL COLOR.

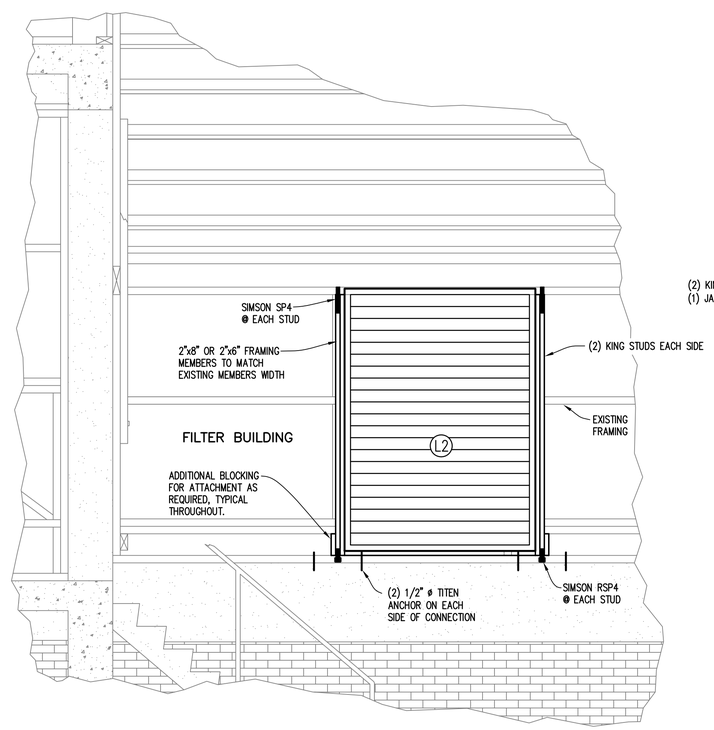

FILTER BUILDING LOUVER – INTERIOR ELEVATION

SCALE: 1/2" = 1'-0"

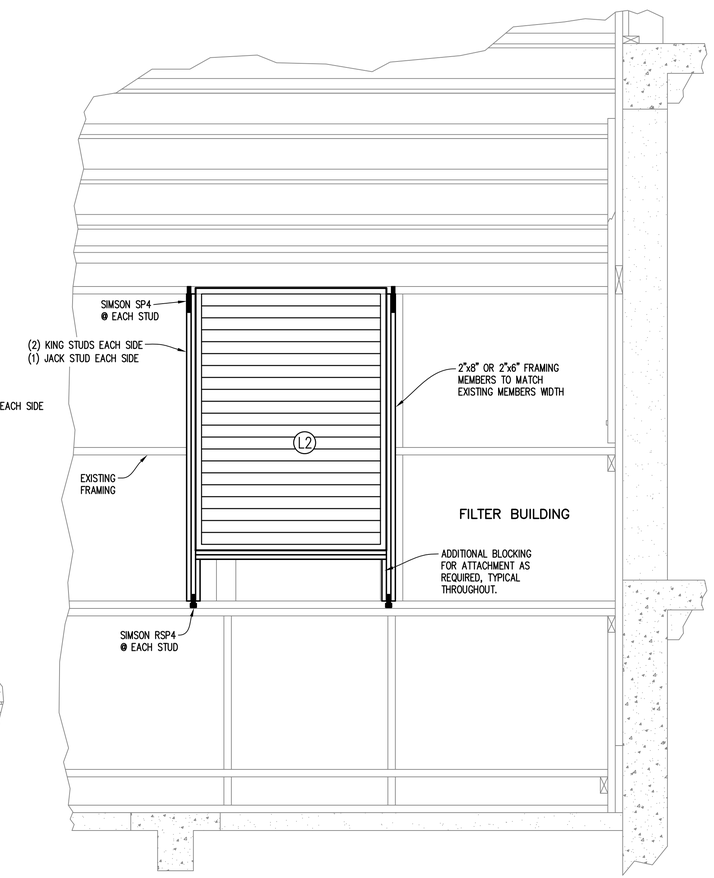

FILTER BUILDING LOUVER – INTERIOR ELEVATION

SCALE: 1/2" = 1'-0"

Municipal Consultants, Inc.
200 Century Park South, Suite 212
Birmingham, Alabama 35226
(205) 822-0387

SHELBY COUNTY COMMISSION

TALLADEGA/SHELBY WTP
BUILDING IMPROVEMENTS

2020

ALABAMA REGISTERED PROFESSIONAL ENGINEER No. 21338 LARRY L. TUCKER
06/26/20

BAR = 1"

Title	LOUVER SCHEDULE AND DETAILS
Drawing	BID SET
Project No.	
Date	6-2020
Scale	AS SHOWN
Sheet	23

COPYRIGHT © MUNICIPAL CONSULTANTS, INC.

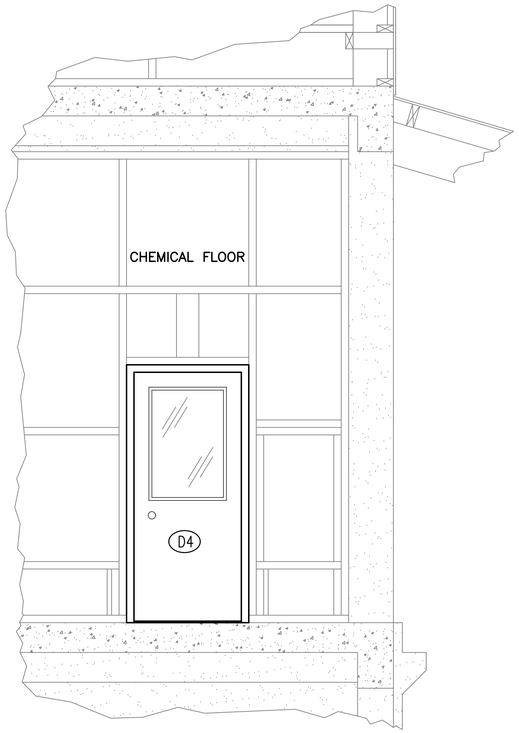

CHEMICAL FLOOR WALK DOOR – INTERIOR ELEVATION
SCALE: 1/2" = 1'-0"

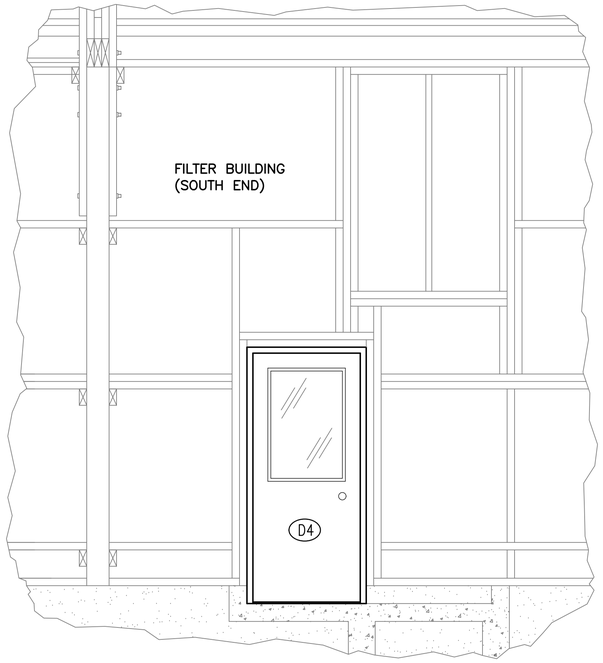

FILTER BUILDING WALK DOOR – INTERIOR ELEVATION
SCALE: 1/2" = 1'-0"

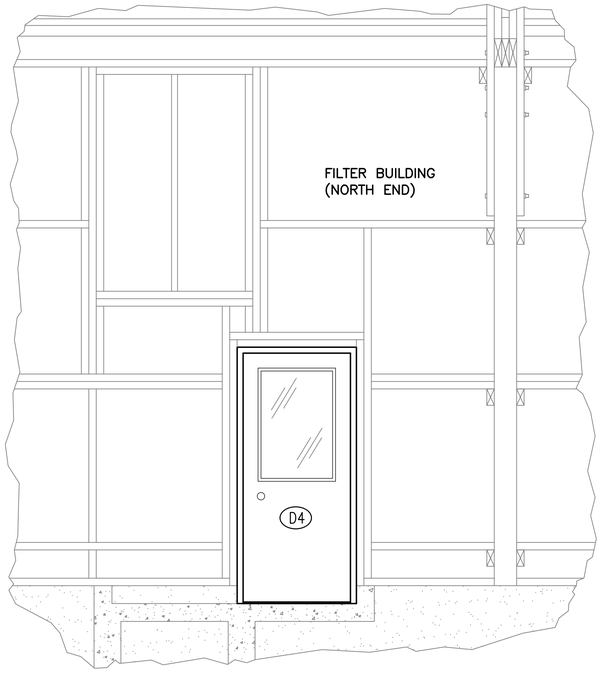

FILTER BUILDING WALK DOOR – INTERIOR ELEVATION
SCALE: 1/2" = 1'-0"

DOOR SCHEDULE						NOTE: DESIGNATION ONLY IDENTIFIES SIMILARITY IN SIZE OR STYLE. SWINGS VARY.
DESIGNATION	NOMINAL DOOR (D) OR ROUGH OPENING (R)	DOOR / FRAME	DESCRIPTION	DOOR & FRAME		HARDWARE
				FINISH	FINISH COLOR	
D4	3'-0" x 7'-0" (D)	STEEL / STEEL	HALF GLASS DOOR WITH TINTED GLASS (24"x36")	KYNAR	CHOSEN BY OWNER	EXTERIOR KEY LOCK SET W/CLOSURE

NOTES:

1. THESE PLANS AND SECTIONS ARE SHOWN AS A GENERIC DETAIL AND MAY NOT SHOW ALL FRAMING AND SUPPORTS REQUIRED. THE CONTRACTOR SHALL PROVIDE ALL ADDITIONAL FRAMING AND SUPPORTS AS REQUIRED.

2. THESE PLANS AND SECTIONS APPLY TO ALL AREAS TO HAVE SINGLE DOORS. MODIFY AS REQUIRED FOR EACH DOOR SIZE AND LOCATION.

3. CONTRACTOR SHALL PROVIDE ALL MATERIALS REQUIRED.

4. MATERIALS SHALL BE NON-TREATED PINE LUMBER OF SAME WIDTH AS EXISTING WALL MEMBERS.

5. ALL WOOD IN CONTACT WITH THE CONCRETE SHALL BE PRESSURE TREATED LUMBER.

6. CONTRACTOR SHALL FOLLOW DOOR MANUFACTURER'S INSTALLATION INSTRUCTIONS AND RECOMMENDATIONS. PROVIDE ALL MATERIALS REQUIRED TO PROPERLY SEAL ALL EDGES OF DOORS. SEALING MATERIALS SHOULD MATCH DOOR OR TRIM MATERIAL COLOR.

7. THE EXISTING DOOR SIZES OR ROUGH OPENING SIZES ARE BASED ON OLD DRAWINGS. THE CONTRACTOR SHALL VERIFY THE EXACT DIMENSIONS OF EACH DOOR TO BE REPLACED PRIOR TO SUBMITTING OR ORDERING OF MATERIALS.

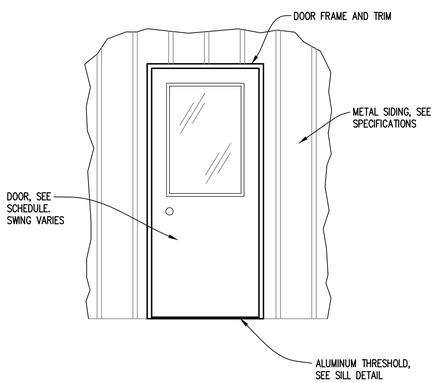

TYPICAL EXTERIOR ELEVATION
SCALE: 1/2" = 1'-0"

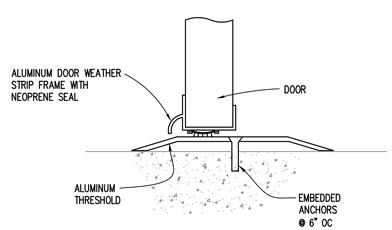

TYPICAL SILL DETAIL
SCALE: 1" = 1'-0"

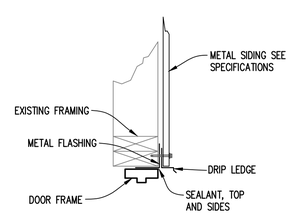

TYPICAL HEAD DETAIL
SCALE: 1" = 1'-0"

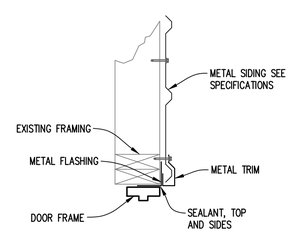

TYPICAL JAMB DETAIL
SCALE: 1" = 1'-0"

Municipal Consultants, Inc.
200 Century Park South, Suite 212
Birmingham, Alabama 35226
(205) 822-0387

SHELBY COUNTY COMMISSION
TALLADEGA/SHELBY WTP
BUILDING IMPROVEMENTS
2020

ALABAMA LICENSED PROFESSIONAL ENGINEER NO. 23366 CHARLES S. COUSTON
06/26/20
NOT VALID WITHOUT SIGNATURE

BAR = 1"

Title: SINGLE DOOR SCHEDULE AND DETAILS

Drawing: BID SET
Project No.
Date: 6-2020
Scale: AS SHOWN
Sheet: 24

COPYRIGHT © MUNICIPAL CONSULTANTS, INC.

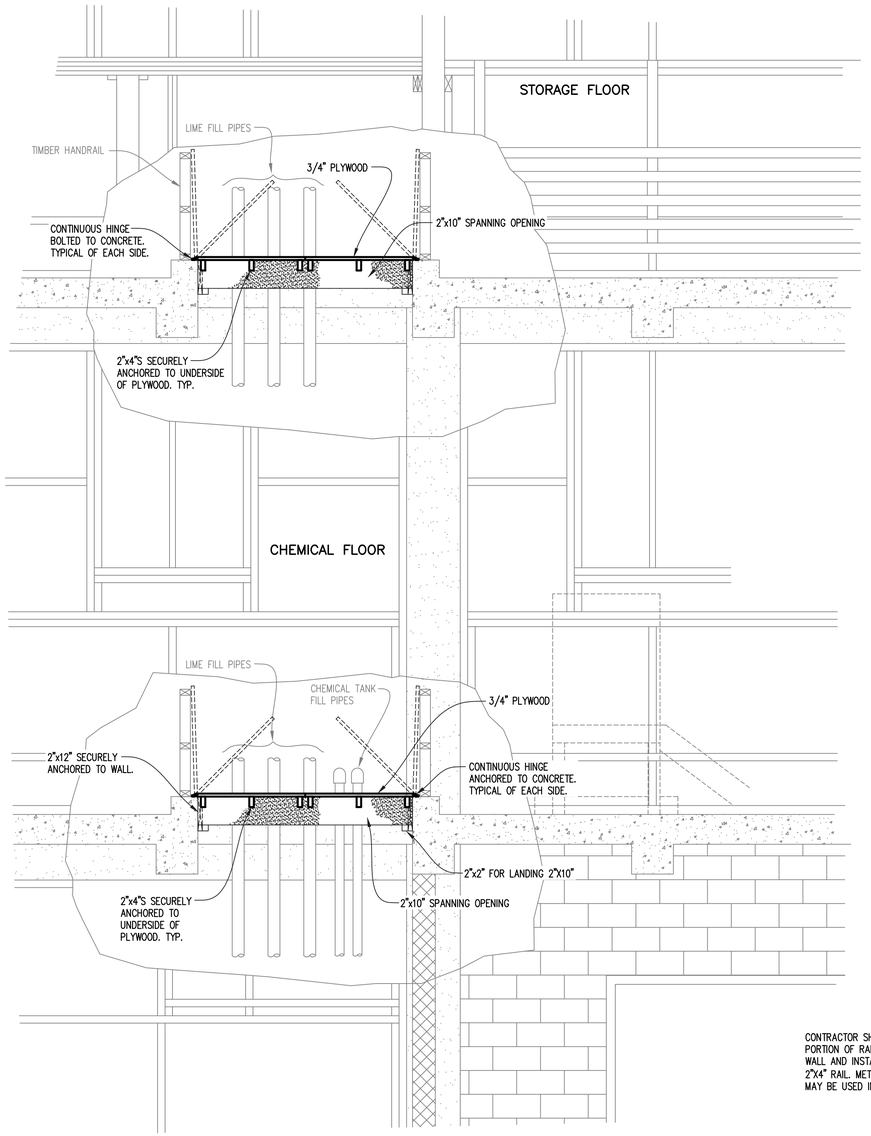

SECTION A–A
SCALE: 1/2" = 1'-0"

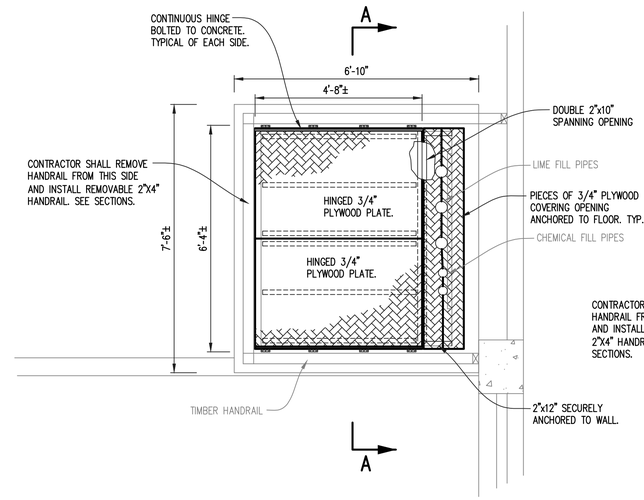

PLAN VIEW @ CHEMICAL FLOOR
SCALE: 1/2" = 1'-0"

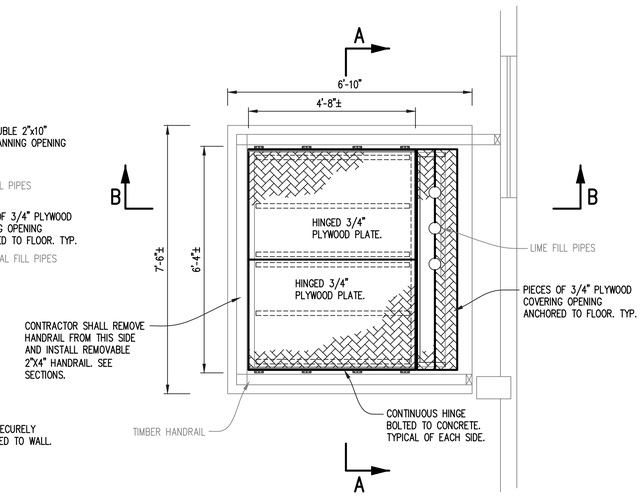

PLAN VIEW @ STORAGE FLOOR
SCALE: 1/2" = 1'-0"

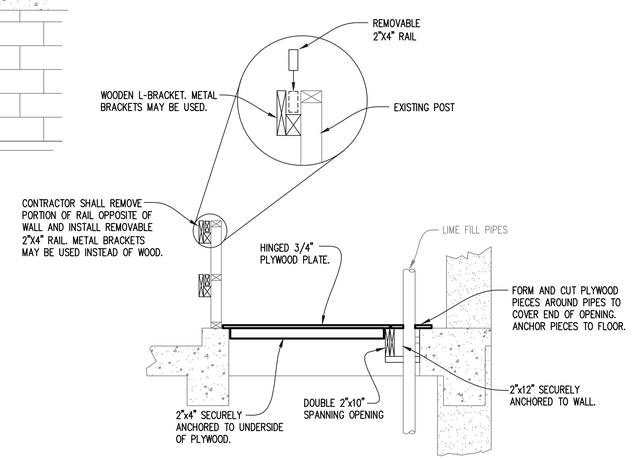

SECTION B–B
SCALE: 1/2" = 1'-0"

NOTES:

1. THERE ARE EXISTING OPENINGS FOR AN OLD BARREL ELEVATOR IN THE STORAGE FLOOR AND IN THE CHEMICAL FLOOR. THE CONTRACTOR SHALL COVER THE EXISTING OPENINGS WITH A REMOVABLE WOODEN PLATE.

2. THE DESIGN OF THE PLATE (OPENING COVER) AND HANDRAIL MODIFICATIONS ARE CONCEPTUAL AND CAN BE MODIFIED TO SUITE THE OWNER DURING CONSTRUCTION. THE FINAL DESIGN SHALL BE COORDINATED WITH THE OWNER/ENGINEER.

3. THE CONTRACTOR SHALL VERIFY ALL DIMENSIONS, ,SIZING, SPACING, ETC. FOR PLATE AND HANDRAIL PRIOR TO PLATE FABRICATION. ALL DIMENSIONS, SIZES, QUANTITIES, ETC. ARE THE RESPONSIBILITY OF THE CONTRACTOR. THE CONTRACTOR SHALL BE AWARE OF ALL EXISTING PIPING AND MAKE ADJUSTMENTS TO OPENING COVERS AS REQUIRED..

4. THERE SHOULD BE 2 WOODEN PLATES MADE OF SINGLE SHEETS OF 3/4" PLYWOOD. EACH PLATE SHALL BE HINGED TO OPPOSITE SIDES OF THE OPENING. THE HINGE SHALL BE A CONTINUOUS HINGE MADE OF STAINLESS STEEL.

5. THE WOODEN PLATES SHALL HAVE 3 (THREE) 2"X4" STIFFENERS MOUNTED TO THE UNDERSIDE. STIFFENERS SHALL RUN THE SHORT WAY. THE STIFFENERS SHOULD START 1" AWAY FROM OPENING WALLS.

6. THE CONTRACTOR SHALL BE AWARE THAT THERE IS CURRENTLY TIMBER HANDRAIL AROUND EACH OPENING. THE CONTRACTOR SHALL MODIFY THIS HANDRAIL SUCH THAT THE WOODEN PLATE CAN BE INSTALLED AND OPENED. THE CONTRACTOR SHALL PROVIDE REMOVABLE 2"X4" HANDRAIL ON THE OPENING EDGE OPPOSITE OF THE BUILDING WALL. CONTRACTOR SHALL PROVIDE ADDITIONAL SUPPORT/ANCHORAGE FOR REMAINING PORTIONS OF HANDRAIL.

7. THE CONTRACTOR SHALL SEAL AROUND THE PLATES WITH AN ⅜" THICK X 2" WIDE NEOPRENE GASKET GLUED TO THE UNDERSIDE OF EACH PLATE. ONCE REMAINING PORTION OF OPENING IS COMPLETE, CONTRACTOR SHALL SEAL WITH SPRAY FOAM, SILICONE, CAULKING, OR SIMILAR. CONTRACTOR SHALL SEAL ALL EDGES, CRACKS, ETC. TO FULLEST EXTENT POSSIBLE. PROVIDE ALL SEALING MATERIALS AS REQUIRED.

8. ALL MATERIALS SHALL BE NON-TREATED PINE LUMBER AND PLYWOOD.

9. THE CONTRACTOR SHALL PAINT BOTH OF THE HINGED PLATES AND THE NEW AND EXISTING HANDRAILS SAFETY YELLOW ONCE THE IMPROVEMENTS ARE COMPLETE. PAINTING SYSTEM SHALL BE AS RECOMMENDED BY THE TNEMEC REPRESENTATIVE. COORDINATE WITH ENGINEER.

Municipal Consultants, Inc.
200 Century Park South, Suite 212
Birmingham, Alabama 35226
(205) 822-0387

SHELBY COUNTY COMMISSION

TALLADEGA/SHELBY WTP
BUILDING IMPROVEMENTS

2020

ALABAMA LICENSED PROFESSIONAL ENGINEER NO. 23366 JAMES S. COUSIN

06/26/20 NOT VALID WITHOUT SIGNATURE

BAR = 1"

Title	BARREL ELEVATOR COVER DETAILS
Drawing	BID SET
Project No.	
Date	6–2020
Scale	AS SHOWN
Sheet	25

COPYRIGHT © MUNICIPAL CONSULTANTS, INC.

1. WOOD CONSTRUCTION NOTES:

1. ALL SAWN LUMBER IN CONTACT WITH GROUND OR CONCRETE SHALL BE SOUTHERN PINE PRESSURE TREATED WITH ALKALINE COPPER QUATERNARY (ACQ) IN ACCORDANCE WITH AMERICAN WOOD PROTECTION ASSOCIATION (AWPA) STANDARD.

   A. ACQ RETENTION = 0.40 LB/FT3 GROUND CONTACT
   0.25 LB/FT3 ABOVE GROUND

   B. ALL CONNECTORS, FASTENERS AND OTHER METAL PRODUCTS USED WITH ACQ PRESSURE TREATED LUMBER SHALL BE HOT-DIP GALVANIZED, STAINLESS STEEL OR AS RECOMMENDED BY THE ACQ MANUFACTURER.

2. WOOD FRAMING MEMBERS: #2 SOUTHERN PINE WITH AN ALLOWABLE BENDING STRESS PER DESIGN VALUES INDICATED IN THE NATIONAL DESIGN SPECIFICATION.

3. ALL MANUFACTURED WOOD FRAMING CONNECTORS TO BE BY SIMPSON STRONG-TIE COMPANY, INC. OR APPROVED EQUAL. ALL CONNECTORS SHALL BE FASTENED TO FRAMING MEMBERS FILLING THE REQUIRED NUMBER OF CONNECTOR HOLES WITH THE TYPE AND SIZE FASTENERS SPECIFIED BY THE MANUFACTURER.

4. ALL WOOD FRAMED WALLS SHALL HAVE SOLID BLOCKING @ 4'-0" VERTICALLY

5. PLYWOOD SHEAR WALLS: 1/2" PLYWOOD, UNLESS NOTED, APA STRUCTURAL I RATED SHEATHING EXPOSURE 1. PANEL IDENTIFICATION INDEX 40/20. LONG DIMENSION OF PANEL PERPENDICULAR TO ALL PLYWOOD EDGES BACKED WITH TWO-INCH NOMINAL OR WIDER FRAMING.

6. PLYWOOD SHEAR WALL NAILING, UNLESS NOTED: 10d NAILS AT 6 INCHES AT ALL FOUR PANEL EDGES AND 12 INCHES AT INTERMEDIATE MEMBERS.

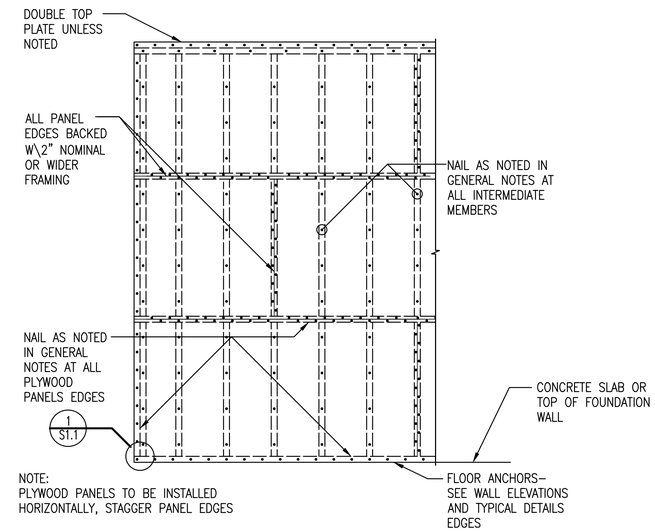

NOTE:
PLYWOOD PANELS TO BE INSTALLED HORIZONTALLY, STAGGER PANEL EDGES

EXTERIOR SHEAR WALL PANEL CONSRUCTION
(PLYWOOD PANELS ON WOOD STUDS)

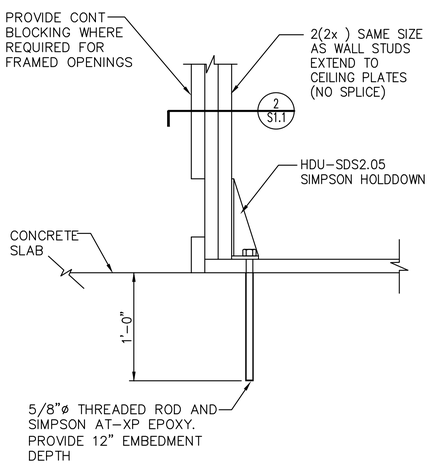

DETAIL 1/S1.1
SCALE: 3/4"=1'-0"

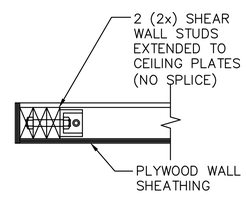

DETAIL 2/S1.1
SCALE: 3/4"=1'-0"

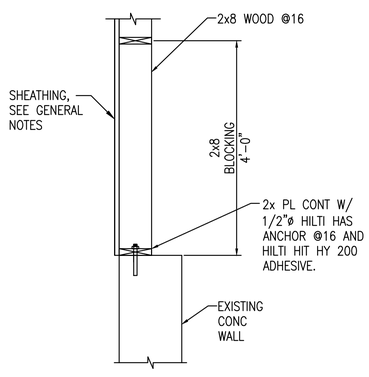

SECTION 3/S1.1
SCALE: 3/4"=1'-0"

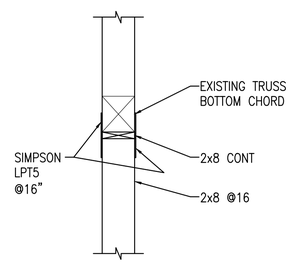

SECTION 4/S1.1
SCALE: 3/4"=1'-0"

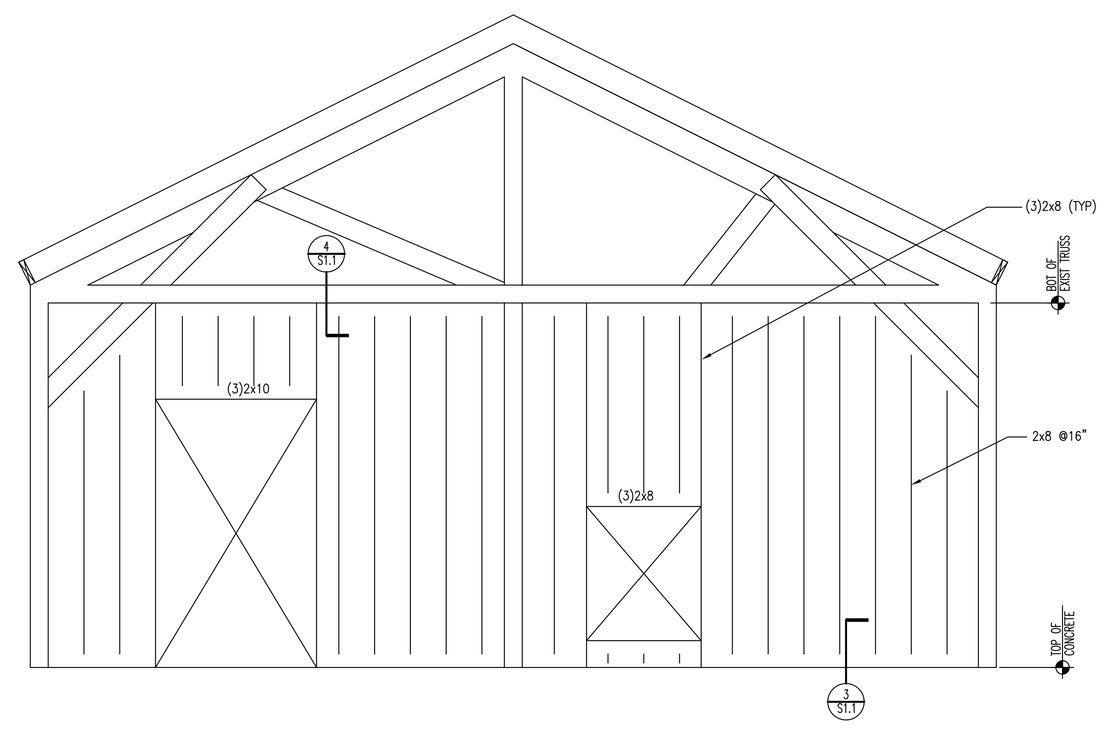

SOUTH END WALL ELEVATION
(FROM INTERIOR)

TUCKER • JONES
3300 CAHABA ROAD, SUITE 210
BIRMINGHAM, ALABAMA 35223
PHONE 205.879.5660
FAX 205.879.5606
JOB# 17026

Municipal Consultants, Inc.
200 Century Park South, Suite 212
Birmingham, Alabama 35226
(205) 822-0367

SHELBY COUNTY COMMISSION
TALLADEGA/SHELBY WTP
BUILDING IMPROVEMENTS
2020

ALABAMA REGISTERED No. 21338 PROFESSIONAL ENGINEER GARY L. TUCKER
06/26/20

BAR = 1"

Title	SHEAR WALL FRAMING & COVER DETAILS
Drawing	BID SET
Project No.	
Date	6-2020
Scale	3/4"=1'
Sheet	26

COPYRIGHT © MUNICIPAL CONSULTANTS, INC.

FILTER BUILDING MEMBER REPLACEMENT SCHEDULE

TRUSS DESIGNATION (SEE PLAN VIEWS AND SECTIONS FOR LOCATION)	MEMBERS NEEDING TO BE REPLACED	COMMENTS
FB-T1	5A, 6, 10	END TRUSS. IT IS PART OF END WALL. ENTIRE COLUMN NEEDS REPLACED.
FB-T2	2A, 4A, 5A	-
FB-T3	-	-
FB-T4	-	-
FB-T5	-	#4A MAY NEED TO BE REPLACED. COORDINATE WITH OWNER/ENGINEER.
FB-T6	10 (LOWER 3'), 12A	SEE DETAIL FOR PARTIAL COLUMN REPLACEMENT.
FB-T7	5B, 10 (LOWER 3'), 12A	#6 MAY NEED TO BE REPLACED. COORDINATE WITH OWNER/ENGINEER.
FB-T8	1B, 6, 10 (LOWER 3')	SEE DETAIL FOR PARTIAL COLUMN REPLACEMENT.
FB-T9	1A, 4A	-

NOTES:

1. THE CONTRACTOR SHALL REMOVE AND REPLACE THE CROSS MEMBERS IDENTIFIED BETWEEN TRUSSES FB-T1 AND FB-T2.

2. THE CONTRACTOR SHALL REMOVE AND REPLACE THE MEMBER CONNECTING THE BOTTOM CORD OF TRUSSES FB-T2 AND FB-T3.

3. THE CONTRACTOR SHALL REMOVE AND REPLACE THE MEMBER CONNECTING THE BOTTOM CORD OF TRUSSES FB-T8 AND FB-T9.

4. SOME MEMBERS ARE TAGGED WITH A PINK DOT OR MARK IN THE FIELD. THESE MEMBERS SHALL ALSO BE REMOVED AND REPLACED ALONG WITH THE MEMBERS IDENTIFIED ON THE DRAWINGS. MARKED MEMBERS IN FIELD MAY NOT EXACTLY MATCH MEMBERS IDENTIFIED ON DRAWINGS. CONTRACTOR SHALL REMOVE AND REPLACE ALL MEMBERS IDENTIFIED OR MARKED.

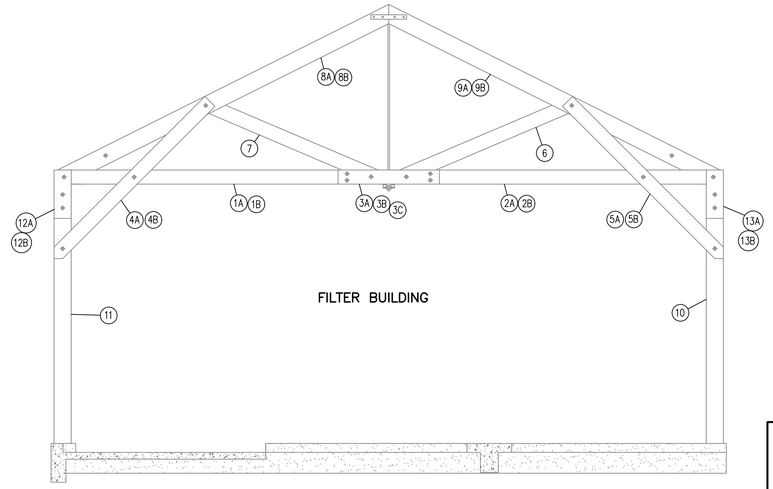

FB-T(1-9) TYPICAL TRUSS
SCALE: 1/4" = 1'-0"

FILTER BUILDING MEMBER REPLACEMENT SCHEDULE

TRUSS DESIGNATION (SEE PLAN VIEWS AND SECTIONS FOR LOCATION)	MEMBERS NEEDING TO BE REPLACED	COMMENTS
AB-T1	-	END TRUSS. IT IS PART OF END WALL.
AB-T2	-	-
AB-T3	12B	-
AB-T4	13A	-
AB-T5	12A	-
AB-T6	12A, 13A	-
AB-T7	-	-
AB-T8	-	-
AB-T9	-	#7 MAY NEED TO BE REPLACED. COORDINATE WITH THE OWNER/ENGINEER.
AB-T10	-	-
AB-T11	-	END TRUSS. IT IS PART OF END WALL.

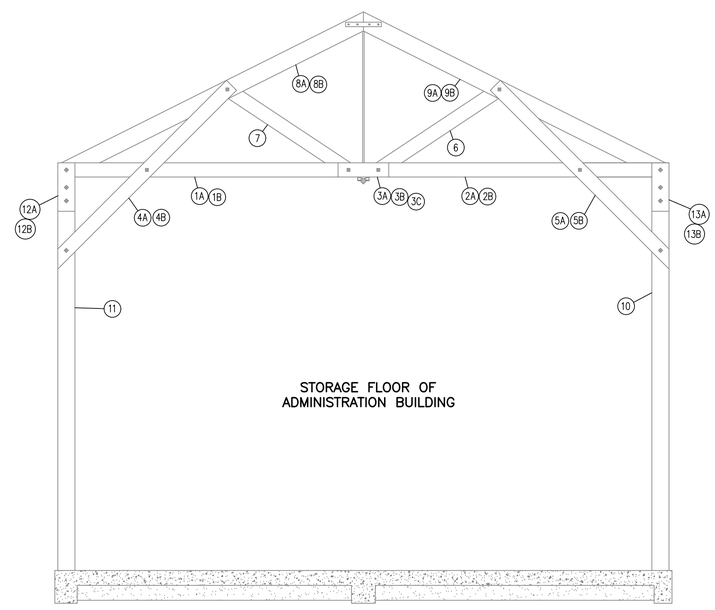

AB-T(1-11) TYPICAL TRUSS
SCALE: 1/4" = 1'-0"

NOTES:

1. THIS DRAWING APPLIES TO THE TRUSSES IN THE FILTER BUILDING AND THE STORAGE FLOOR OF THE ADMINISTRATION BUILDING.

2. THIS DRAWING INDICATES GENERAL REQUIREMENTS FOR THE TRUSSES AND TRUSS MEMBER REPLACEMENT. COORDINATE ALL REQUIREMENTS DURING BID TIME AND SUBMITTALS WITH OWNER/ENGINEER. SEE OTHER DRAWINGS FOR ADDITIONAL REQUIREMENTS FOR OTHER WALL MEMBER REPLACEMENT.

3. THESE STRUCTURES ARE EXISTING. THE CONTRACTOR SHALL BE AWARE THAT ALL PIPING, ELECTRICAL, HVAC, ETC. MAY NOT BE SHOWN IN PLAN VIEW OR SECTIONS. IT IS THE CONTRACTOR'S RESPONSIBILITY TO VERIFY/IDENTIFY ANY CONFLICTS/PROBLEMS WITH THE PROPOSED IMPROVEMENTS AND THE EXISTING MATERIAL AND MAKE ANY ADJUSTMENTS NECESSARY TO COMPLETE THE PROJECT.

4. THE CONTRACTOR SHALL BE AWARE THAT ALL DIMENSIONS, EXISTING EQUIPMENT AND PIPING LOCATIONS, ETC. ARE BASED ON OLD DRAWINGS. IT IS THE CONTRACTOR'S RESPONSIBILITY TO VERIFY ALL DIMENSIONS, LOCATIONS, QUANTITY, ETC. PRIOR TO ORDERING OR PURCHASING MATERIALS.

5. THE CONTRACTOR SHALL FULLY REPLACE ALL MEMBERS IDENTIFIED EITHER IN THE SCHEDULE OR INDICATED BY THE OWNER. CONTRACTOR SHALL BE AWARE THAT EACH MEMBER TO BE REPLACED MAY REQUIRE ADDITIONAL MEMBERS BE REMOVED OR REPLACED FOR FULL REPLACEMENT OF THE ATTACHED MEMBER. IF THE EXISTING ACCEPTABLE MEMBERS ARE DAMAGED BY THE CONTRACTOR DURING REMOVAL, THEY SHALL BE REPLACED IN LIKE KIND AT NO ADDITIONAL COST TO THE OWNER. ALL COSTS FOR THIS SHALL BE INCLUDED IN THE BID PRICE.

6. THE CONTRACTOR SHALL PROVIDE ALL MATERIALS AND EQUIPMENT REQUIRED FOR REMOVAL AND REPLACEMENT OF ALL MEMBERS IDENTIFIED OR NOTED.

7. TRUSS MEMBERS/TIMBERS SHALL BE REPLACED WITH NON-TREATED HARDWOOD (OAK OR SIMILAR) LUMBER OF THE EXACT SAME DIMENSIONS OF EXISTING MEMBERS.

8. ALL EXISTING BOLTING/ANCHORING MATERIALS MAY BE REUSED WHERE POSSIBLE AND PRACTICAL. IF DAMAGED DURING REMOVAL OR DAMAGED OTHERWISE OR WHERE FOUND UNUSABLE, CONTRACTOR SHALL PROVIDE ALL BOLTING MATERIALS (BOLTS, NUTS, WASHERS, ETC.) OF SAME SIZES TO MATCH EXISTING MATERIALS. ALL BOLTING MATERIALS (I.E. BOLTS, WASHERS, NUTS, ETC.) PROVIDED SHALL BE HOT DIPPED GALVANIZED.

9. THE CONTRACTOR SHALL BE AWARE THAT THERE IS EXISTING BLOCKING AND ADDITIONAL MEMBERS THAT MAY NOT BE SEEN OR SHOWN IN THIS DETAIL. THE CONTRACTOR SHALL REPLACE ALL BLOCKING AND MEMBERS IF DAMAGED DURING REMOVAL OR REPLACEMENT OF OTHER MEMBERS.

10. ALL EXISTING TIMBERS ARE CURRENTLY PAINTED. ALL TIMBERS REPLACED DO NOT HAVE TO BE PAINTED.

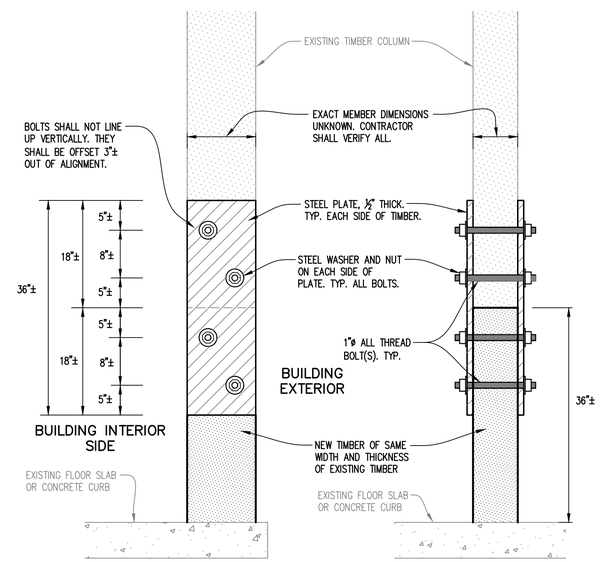

ELEVATION
SCALE: NONE

SECTION
SCALE: NONE

NOTES:

1. THE CONTRACTOR SHALL VERIFY ALL DIMENSIONS, SIZES, ETC.

2. THE CONTRACTOR SHALL CUT AND REMOVE ROTTEN OR TERMITE LADEN PORTIONS OF EXISTING TIMBER COLUMNS IDENTIFIED WITH NEW HARDWOOD TIMBER COLUMNS OF SAME SIZE. THE EXISTING COLUMNS ARE BOLTED TO THE EXISTING CONCRETE FLOORS AND SHALL BE RE-BOLTED ONCE REPLACED.

3. THE CONTRACTOR SHALL PROVIDE ALL OF THE HARDWARE REQUIRED FOR THE COLUMN REPLACEMENT(S). THIS INCLUDES, BUT IS NOT LIMITED TO, THE TIMBER, PLATES, WASHERS, NUTS, BOLTS (I.E. HARDWARE), APPURTENANCES, ETC. REQUIRED FOR THE REPLACEMENT.

4. TIMBERS SHALL BE REPLACED WITH NON-TREATED HARDWOOD (OAK OR SIMILAR) LUMBER OF THE EXACT SAME DIMENSIONS OF EXISTING MEMBERS.

5. THE PROPOSED EXPOSED PLATES SHALL BE HOT DIPPED GALVANIZED A36 CARBON STEEL.

6. ALL THREADED RODS, BOLTS, NUTS, WASHERS, AND OTHER ATTACHMENT HARDWARE SHALL BE HOT DIPPED GALVANIZED CARBON STEEL. THREADED RODS SHALL BE 1" DIAMETER (MINIMUM) AND CONFORM TO ASTM A193 GRADE B7. NUTS SHALL CONFORM TO ASTM A194 GRADE 2H.

7. THE CONTRACTOR SHALL BE AWARE THAT THERE IS EXISTING BLOCKING AND ADDITIONAL MEMBERS THAT MAY NOT BE SEEN OR SHOWN IN THIS DETAIL. THE CONTRACTOR SHALL REPLACE ALL BLOCKING AND MEMBERS IF DAMAGED DURING REMOVAL OR REPLACEMENT OF OTHER MEMBERS.

8. CONTRACTOR SHALL PROVIDE ALL BRACING, BLOCKINGS, ETC. AS REQUIRED TO PERFORM ALL WORK.

PARTIAL COLUMN REPLACEMENT DETAIL
SCALE: NONE

Municipal Consultants, Inc.
200 Century Park South, Suite 212
Birmingham, Alabama 35226
(205) 822-0387

SHELBY COUNTY COMMISSION
TALLADEGA/SHELBY WTP
BUILDING IMPROVEMENTS
2020

ALABAMA REGISTERED PROFESSIONAL ENGINEER No. 21338 CORYL L. TUCKER
06/26/20

BAR = 1"

Title: EXISTING WALL FRAMING REPLACEMENT CHART

Drawing: BID SET
Project No.
Date: 6-2020
Scale: 1/4"=1'
Sheet: 27

COPYRIGHT © MUNICIPAL CONSULTANTS, INC.

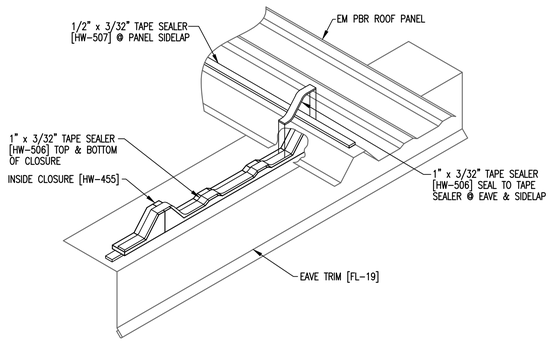

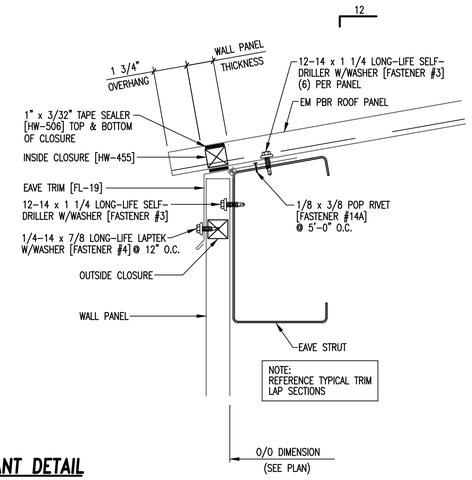

EAVE SEALANT DETAIL

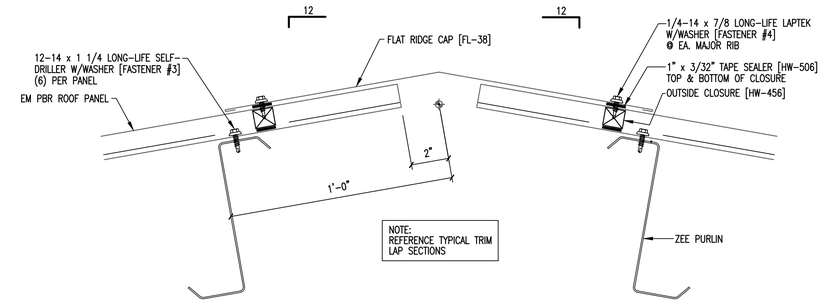

FLAT RIDGE CAP/HIP FLASHING DETAIL

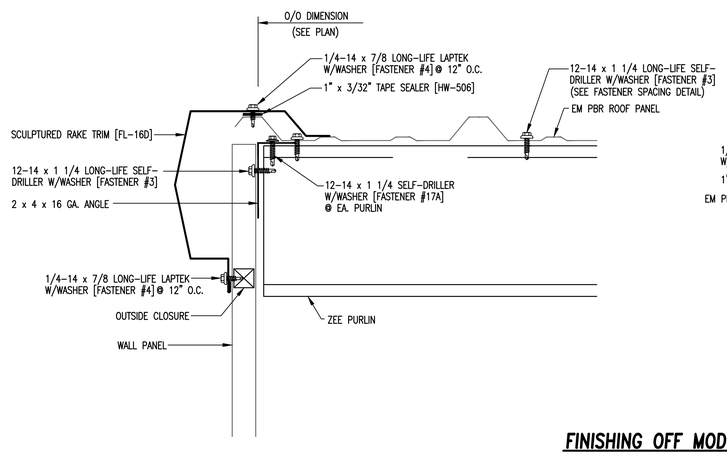

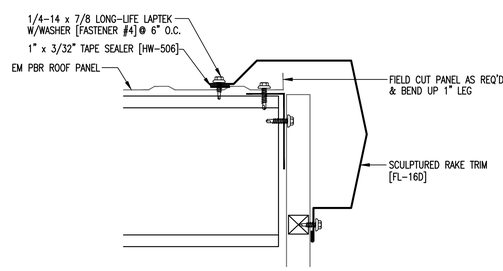

FINISHING OFF MODULE

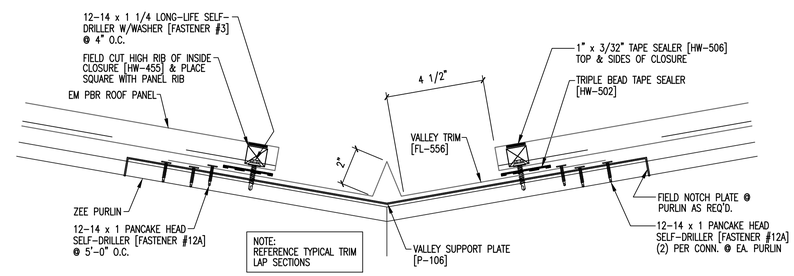

STANDARD VALLEY DETAIL

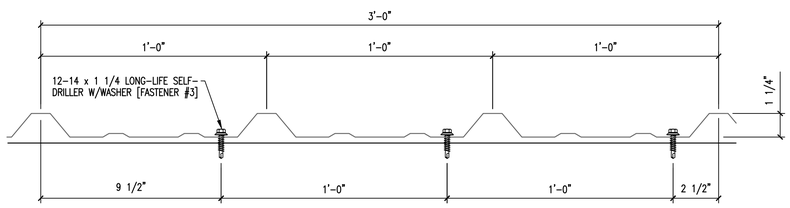

EM PBR FASTENER SPACING @ INTERMEDIATE SUPPORTS

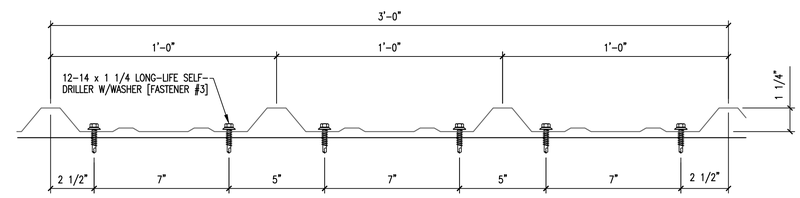

EM PBR FASTENER SPACING @ PANEL ENDS

NOTE: WHEN INSTALLING THE METAL ROOFING AND SIDING, THE CONTRACTOR SHALL FOLLOW ALL MANUFACTURERS' INSTALLATION RECOMMENDATIONS AND INSTRUCTIONS. METAL ROOFING AND SIDING SHALL NOT SPAN MORE THAN 5' OR AS REQUIRED BY THE METAL MANUFACTURER. THE CONTRACTOR SHALL PROVIDE ALL INTERMEDIATE TIMBERS, SUPPORTS, ETC. SUCH THAT METAL IS PROPERLY SUPPORTED THROUGHOUT THE STRUCTURES.

Municipal Consultants, Inc.
200 Century Park South, Suite 212
Birmingham, Alabama 35226
(205) 822-0387

SHELBY COUNTY COMMISSION

TALLADEGA/SHELBY WTP
BUILDING IMPROVEMENTS

2020

ALABAMA LICENSED PROFESSIONAL ENGINEER NO. 23366 J. S. COUSER

06/26/20

NOT VALID WITHOUT SIGNATURE

BAR = 1"

Title	METAL ROOFING AND SIDING DETAILS
	BID SET
Drawing	
Project No.	
Date	6-2020
Scale	NONE
Sheet	28

COPYRIGHT © MUNICIPAL CONSULTANTS, INC.

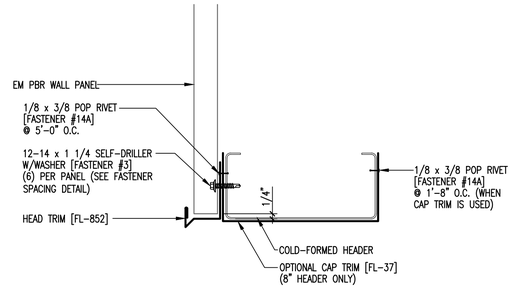

FRAMED OPENING HEADER DETAIL

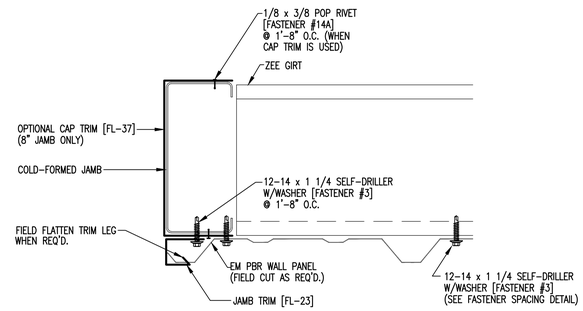

FRAMED OPENING JAMB DETAIL

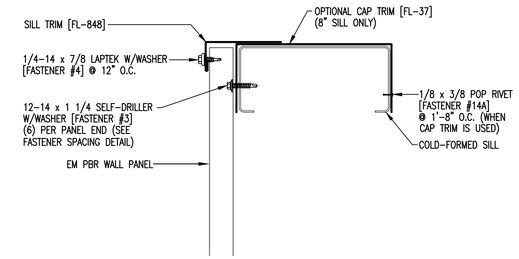

FRAMED OPENING SILL DETAIL

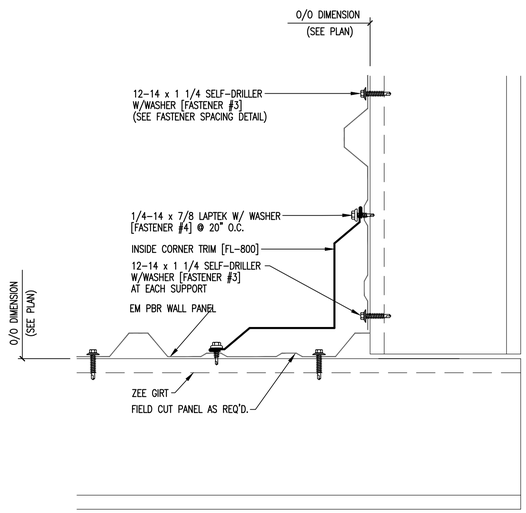

INSIDE CORNER DETAIL

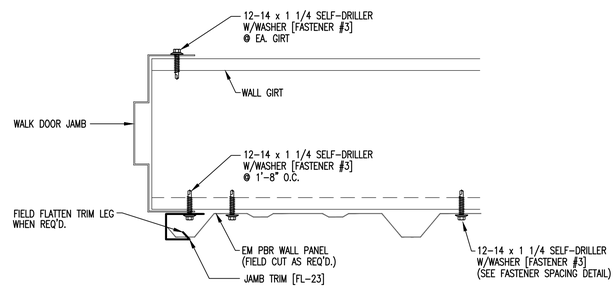

WALK DOOR JAMB DETAIL

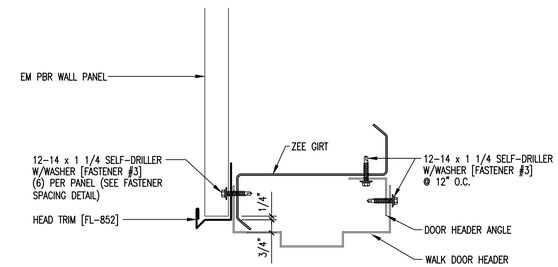

WALK DOOR HEADER DETAIL

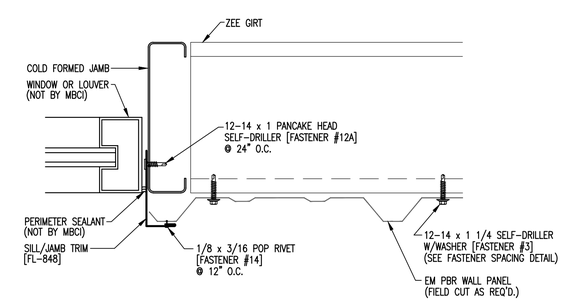

WINDOW/LOUVER JAMB DETAIL

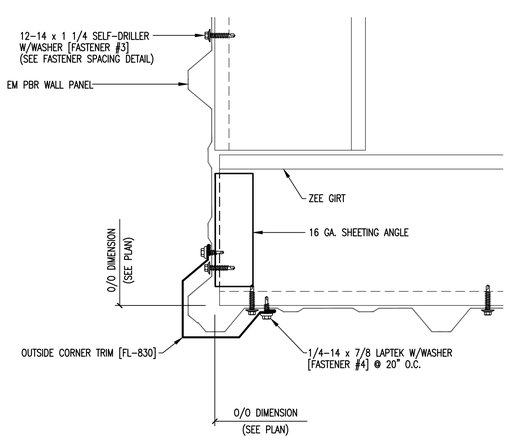

OUTSIDE CORNER DETAIL

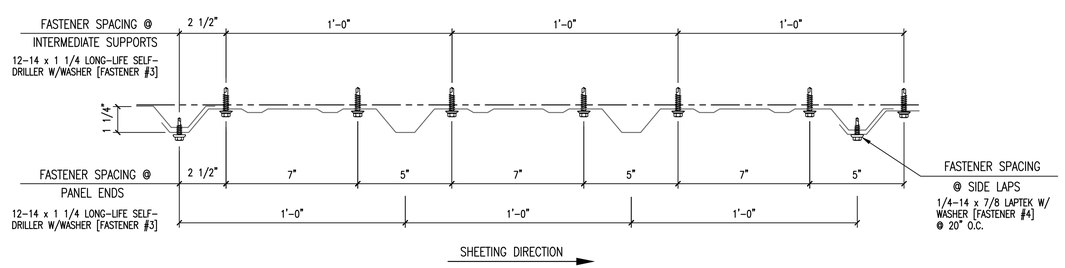

EM PBR FASTENER SPACING

NOTE: WHEN INSTALLING THE METAL ROOFING AND SIDING, THE CONTRACTOR SHALL FOLLOW ALL MANUFACTURERS' INSTALLATION RECOMMENDATIONS AND INSTRUCTIONS. METAL ROOFING AND SIDING SHALL NOT SPAN MORE THAN 5' OR AS REQUIRED BY THE METAL MANUFACTURER. THE CONTRACTOR SHALL PROVIDE ALL INTERMEDIATE TIMBERS, SUPPORTS, ETC. SUCH THAT METAL IS PROPERLY SUPPORTED THROUGHOUT THE STRUCTURES.

Municipal Consultants, Inc.
200 Century Park South, Suite 212
Birmingham, Alabama 35226
(205) 822-0387

SHELBY COUNTY COMMISSION

TALLADEGA/SHELBY WTP
BUILDING IMPROVEMENTS

2020

ALABAMA LICENSED NO. 23366 PROFESSIONAL ENGINEER CHRIS S. COUSER

06/26/20

NOT VALID WITHOUT SIGNATURE

BAR = 1"

Title	METAL TRIM DETAILS
	BID SET
Drawing	
Project No.	
Date	6-2020
Scale	NONE
Sheet	29

COPYRIGHT © MUNICIPAL CONSULTANTS, INC.

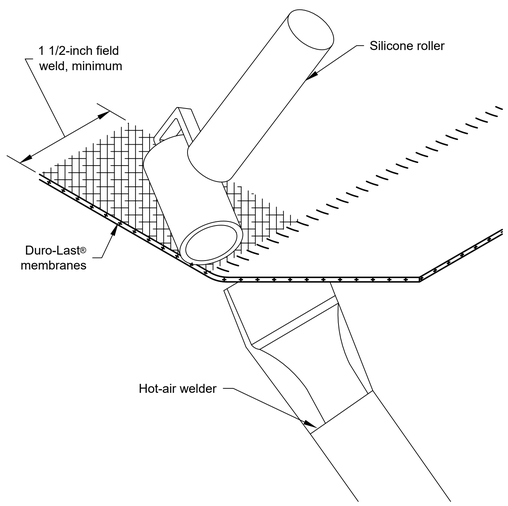

Note: After any field seam is completed, it must be probed to ensure that a secure weld has been made.

FIELD SEAMING
New Construction or Reroof

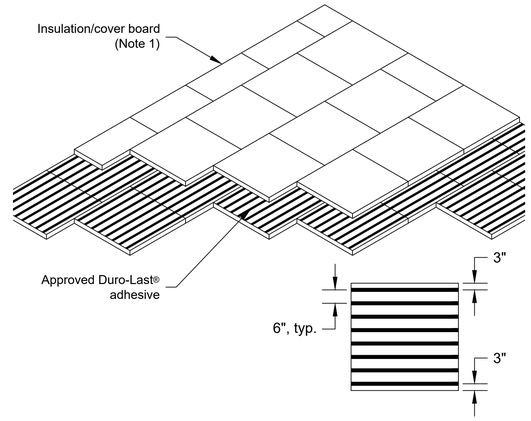

Note 1: Insulation must be no greater than 4 x 4-foot. Cover board must be no greater than 4 x 8-foot.
Note 2: Perimeter width equals the lesser of 10% of narrowest building dimension or 40% of building height.
Note 3: Contact Duro-Last® Engineering Services Department for assistance in determining adhesion requirements if: building is 40 feet tall, or taller; or building is located in an area with an ASCE 7-05 design wind speed of 110 mph, or higher (150 mph, or higher, for ASCE 7-10); or adhesion resistance is less than 150 pounds per square foot.
Note 4: It is recommended to stagger all joints between boards by 50% from row to row and layer to layer.
Note 5: Adjoin panel edges together. Neatly fit to roof deck and around penetrations with no gaps greater than 1/4 inch. Seal all penetrations and deck/wall transitions.

PERIMETER ADHESION
New Construction or Reroof

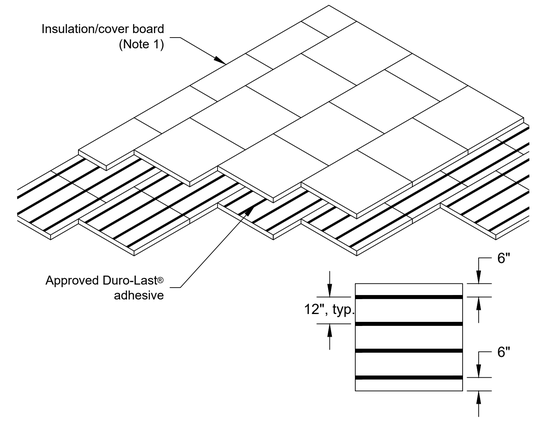

Note 1: Insulation must be no greater than 4 x 4-foot. Cover board must be no greater than 4 x 8-foot.
Note 2: Perimeter width equals the lesser of 10% of narrowest building dimension or 40% of building height.
Note 3: Contact Duro-Last® Engineering Services Department for assistance in determining adhesion requirements if: building is 40 feet tall, or taller; or building is located in an area with an ASCE 7-05 design wind speed of 110 mph, or higher (150 mph, or higher, for ASCE 7-10); or adhesion resistance is less than 150 pounds per square foot.
Note 4: It is recommended to stagger all joints between boards by 50% from row to row and layer to layer.
Note 5: Adjoin panel edges together. Neatly fit to roof deck and around penetrations with no gaps greater than 1/4 inch. Seal all penetrations and deck/wall transitions.

FIELD ADHESION
New Construction or Reroof

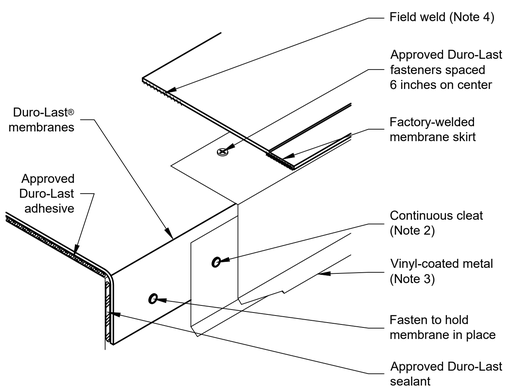

Note 1: This detail may also be used on parapet walls.
Note 2: All adhered installations that utilize Vinyl-Coated Metal Drip Edge require a continuous cleat. Continuous cleat must be fastened 6 inches on center. Use roofing nails that penetrate substrate by a minimum of 1-1/2 inches.
Note 3: Each section must overlap by 1-1/2 inches.
Note 4: All field welds shall be a minimum of 1-1/2 inches wide.
Note 5: Wood nailers must withstand a minimum force of 180 pounds per lineal foot (per building code). Any pull values greater than 270 pounds will allow for a fastener spacing of 18 inches on center. Pull values less than 270 pounds will require additional fasteners. **The installing contractor is responsible for meeting building codes.**
Note 6: Refer to specifications for vapor barrier, insulation and cover board requirements.

METAL DRIP EDGE
New Construction or Reroof

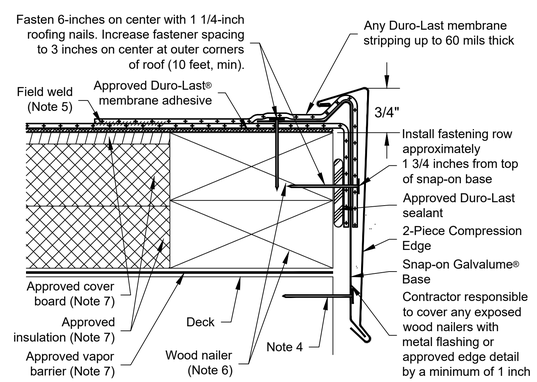

Note 1: This detail may also be used on parapet walls.
Note 2: The use of this detail is not to exceed a 2-inch per 12-inch slope.
Note 3: Allow for 1/8-inch expansion gap between 10-foot lengths of snap-on base. Overlap snap-on covers by 2 inches between 10-foot lengths.
Note 4: When installing this detail with a 6-inch or greater vertical surface, an additional fastening row must be located approximately 1 1/8 inches from bottom of snap-on base.
Note 5: All field welds shall be a minimum of 1-1/2 inches wide.
Note 6: Wood nailers must withstand a minimum force of 180 pounds per lineal foot (per building code). Any pull values greater than 270 pounds will allow for a fastener spacing of 18 inches on center. Pull values less than 270 pounds will require additional fasteners. **The installing contractor is responsible for meeting building codes.**
Note 7: Refer to specifications for vapor barrier, insulation and cover board requirements.

2 PIECE COMPRESSION EDGE
New Construction or Reroof

Municipal Consultants, Inc.
200 Century Park South, Suite 212
Birmingham, Alabama 35226
(205) 822-0387

SHELBY COUNTY COMMISSION
TALLADEGA/SHELBY WTP
BUILDING IMPROVEMENTS
2020

ALABAMA LICENSED PROFESSIONAL ENGINEER NO. 23366 MARK S. COUSLER
06/26/20
NOT VALID WITHOUT SIGNATURE

BAR = 1"

Title	MEMBRANE ROOF DETAILS
Drawing	BID SET
Project No.	
Date	6-2020
Scale	3/16"=1'
Sheet	30

COPYRIGHT © MUNICIPAL CONSULTANTS, INC.

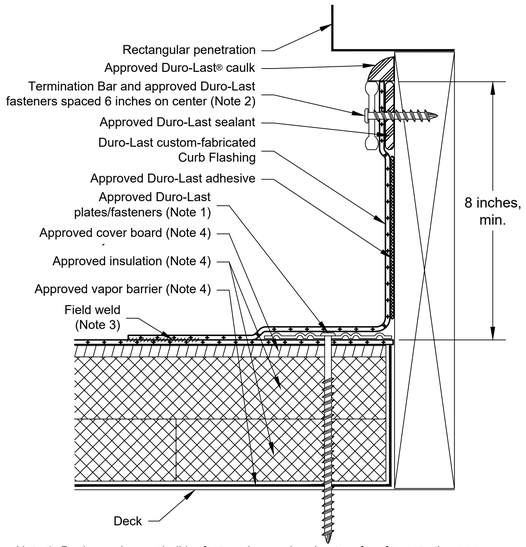

Note 1: Deck membrane shall be fastened around perimeter of roof penetration as per respective zone the roof access hatch is located within (field, perimeter, corner).

Note 2: Termination Bar shall have an approved Duro-Last fastener within 1 inch of each corner.

Note 3: All field welds shall be a minimum of 1-1/2 inches wide.

Note 4: Refer to specifications for vapor barrier, insulation and cover board requirements.

Note 5: This detail may be used with adhered or mechanically fastened deck membrane.

RECTANGULAR PENETRATION
New Construction or Reroof

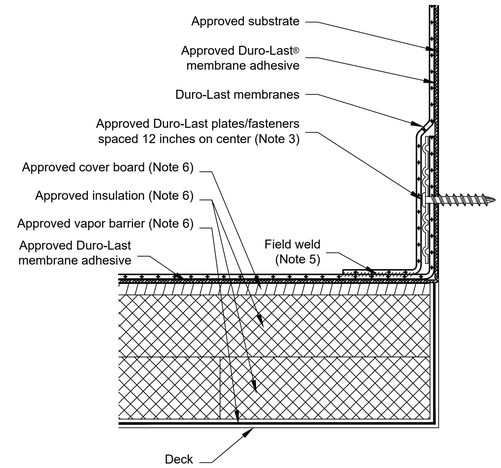

Note 1: When deck membrane is adhered and wall membrane is mechanically fastened, refer to Detail Drawings AS6000 and AS6001.

Note 2: Minimum termination height is 8 inches above finished roof deck.

Note 3: When wall flashing exceeds 5 feet in height, horizontal rows of plates/fasteners are required at 5-foot intervals and spaced 12 inches on center along rows.

Note 4: Any approved membrane plate may be used. It is recommended to use 3-Inch Metal Plates or Cleat Plates®.

Note 5: All field welds shall be a minimum of 1-1/2 inches wide.

Note 6: Refer to specifications for vapor barrier, insulation and cover board requirements.

WALL FLASHING
New Construction or Reroof

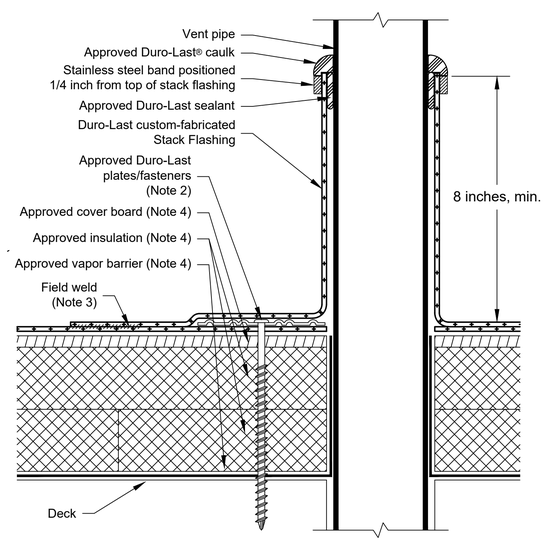

Note 1: Lead flashings must be removed prior to installing Duro-Last Stack Flashings.

Note 2: Deck membrane shall be fastened around the perimeter of the Duro-Last Stack Flashing as per the respective zone the Duro-Last Stack Flashing is located within (field, perimeter, corner), no less than one fastener per flashing.

Note 3: All field welds shall be a minimum of 1-1/2 inches wide.

Note 4: Refer to specifications for vapor barrier, insulation and cover board requirements.

ROUND PENETRATION
New Construction or Reroof

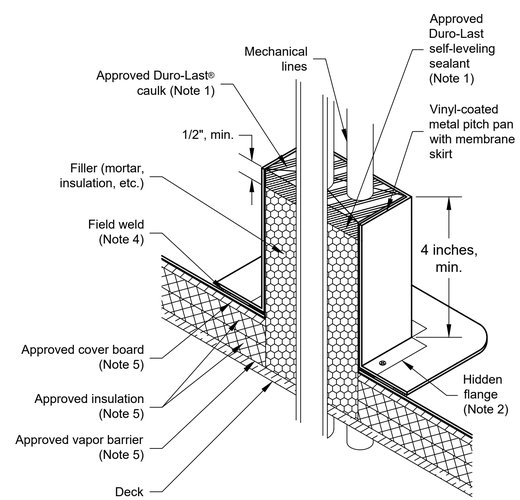

Note 1: Water must not be allowed to pond within pitch pan. Ensure that approved Duro-Last self-leveling sealant is level with top of curb. Cover with approved Duro-Last caulk to slope to outside of pitch pan.

Note 2: Use approved Duro-Last fasteners to secure hidden flange as per respective zone the pitch pan is located within (field, perimeter, corner).

Note 3: Mechanical lines must have a minimum of 1/4-inch clearance between objects or pitch pan edges.

Note 4: All field welds shall be a minimum of 1-1/2 inches wide.

Note 5: Refer to specifications for vapor barrier, insulation and cover board requirements.

VINYL-COATED METAL PITCH PAN
New Construction or Reroof

Municipal Consultants, Inc.
200 Century Park South, Suite 212
Birmingham, Alabama 35226
(205) 822-0387

SHELBY COUNTY COMMISSION

TALLADEGA/SHELBY WTP
BUILDING IMPROVEMENTS

2020

STATE OF ALABAMA
LICENSED
NO. 23366
PROFESSIONAL ENGINEER
MARSS COUSIN

06/26/20

NOT VALID WITHOUT SIGNATURE

BAR = 1"

Title	MEMBRANE ROOF DETAILS
	BID SET
Drawing	
Project No.	
Date	6-2020
Scale	3/16"=1'
Sheet	31

COPYRIGHT © MUNICIPAL CONSULTANTS, INC.

GENERAL ELECTRICAL, CONTROL, & INSTRUMENTATION REQUIREMENTS

1. SAFETY, INCLUDING BUT BY NO MEANS LIMITED TO COORDINATION WITH OTHERS FOR CIRCUITS OR EQUIPMENT THAT IS LIVE OR MAY BECOME LIVE, IS THE RESPONSIBILITY SOLELY OF THE CONTRACTOR. THE OWNER OR THE ENGINEER ARE NOT RESPONSIBLE FOR SAFETY.

2. ALL WORK AND MATERIAL(S) SHALL BE IN FULL COMPLIANCE WITH ALL APPLICABLE CODES, LAWS, AND ORDINANCES, THE NATIONAL ELECTRICAL CODE AND THE REGULATIONS OF THE LOCAL UTILITY COMPANIES. OBTAIN AND PAY FOR ANY AND ALL REQUIRED PERMITS, INSPECTIONS, CERTIFICATES OF INSPECTIONS AND APPROVAL, AND THE LIKE.

3. CONTRACTOR SHALL COORDINATE ALL COMPONENTS IN A TIMELY MANNER.

4. CONTRACTOR SHALL PROVIDE ALL MEANS, METHODS, AND MISCELLANEOUS APPURTENANCES, ETC., AS REQUIRED TO PERFORM AND PROPERLY COMPLETE THE WORK.

5. ALL MATERIALS AND WORK SHALL BE IN FULL COMPLIANCE WITH THE NEC, UL LISTING, AND WITH THE OWNER'S ELECTRICAL INSPECTOR REQUIREMENTS.

6. THESE PLANS DO NOT SHOW ALL THE APPURTENANCES, DETAILS, AND MATERIALS, ETC. REQUIRED TO PROPERLY PERFORM THE WORK. THE CONTRACTOR SHALL PROVIDE ALL APPURTENANCES, DETAILS, AND MATERIALS, ETC. REQUIRED AT NO EXTRA TIME OR COST.

7. THESE PLANS DO NOT, IN GENERAL, SHOW EXACT LOCATIONS OR CONFIGURATIONS OF CONDUIT ROUTING AND METHODS, INCLUDING THE METHOD OF ACCESSING STRUCTURES. THE CONTRACTOR SHALL PROPOSE TO THE ENGINEER AND OWNER HIS REQUESTED ROUTING (FOR BOTH NEW AND EXISTING STRUCTURES) FOR THEIR APPROVAL OR DENIAL OF APPROVAL. ROUTING WILL HAVE TO BE ADJUSTED IN THE FIELD TO AVOID NEW, PROPOSED, OR EXISTING PIPING, STRUCTURES, AND EQUIPMENT CONFLICTS, ETC.

8. CAREFULLY EXAMINE GENERAL CONDITIONS, OTHER SPECIFICATION SECTIONS, AND OTHER DRAWINGS (IN ADDITION TO ELECTRICAL) IN ORDER TO BE FULLY ACQUAINTED WITH THEIR EFFECT ON ELECTRICAL WORK.

9. THE CONTRACTOR SHALL INSPECT ALL SITES WHERE WORK IS NEEDED TO DETERMINE DIMENSIONS AND ALL CONDITIONS AFFECTING ELECTRICAL WORK. FAILURE TO DO SO SHALL IN NO WAY RELIEVE CONTRACTOR OF HIS RESPONSIBILITY UNDER CONTRACT.

10. THE CONTRACTOR SHALL PROVIDE ALL REQUIRED WIRING, ELECTRICAL COMPONENTS, MOUNTING HARDWARE, ETC. FOR A COMPLETE AND FULLY FUNCTIONAL PROJECT.

11. INSTALL SEALTIGHT FLEX CONDUIT WITH T & B FLEX CONDUIT FITTINGS ON BOTH ENDS AT ALL EQUIPMENT. PROVIDE SUFFICIENT FLEX CONDUIT TO ALLOW MOTOR TO BE REMOVED FROM EQUIPMENT AND SET ON FLOOR. INSTALL GROUND WIRE IN FLEX CONDUIT PER NEC TABLE 250-95 OR PER SCHEDULE, WHICHEVER IS LARGER. GALVANIZED, PLATED, OR SIMILAR MATERIALS THAT ARE SUBJECT TO CORROSION IN HIGHLY CORROSIVE ATMOSPHERES SHALL NOT BE ALLOWED ON ANY FLEXIBLE TYPE CONDUIT OR SIMILAR DEVICES.

12. INSTALL CONDUIT SO IT DOES NOT CREATE TRIPPING HAZARDS. ABSOLUTELY NO TRIPPING HAZARDS WILL BE ALLOWED.

13. ALL CONDUITS SHALL BE INSTALLED NEAT, PLUMB, LEVEL. ETC. TO THE MAXIMUM EXTENT POSSIBLE. FOR CONDUIT RUN OVERHEAD, 8' MINIMUM CLEARANCE REQUIRED. CONDUIT SHALL BE INSTALLED IN A CONCISE AND NEAT MANNER ACCEPTABLE TO OWNER.

14. THE CONTRACTOR SHALL INSTALL ALL CONDUIT AS SHOWN AND REQUIRED. THE CONTRACTOR SHALL PENETRATE ALL WALLS, FLOORS, SLABS, ETC. REQUIRED TO INSTALL CONDUIT. CONTRACTOR SHALL SEAL FLOORS AND WALLS WITH NON SHRINK GROUT OR CAULK AS REQUIRED.

15. THE CONDUIT PATHS SHOWN ARE CONCEPTUAL ONLY. THE CONTRACTOR SHALL INSTALL CONDUITS AROUND ALL EXISTING UTILITIES, PIPING, EQUIPMENT, BUILDING MEMBERS, ETC. THE CONTRACTOR SHALL ROUTE CONDUITS AS NECESSARY. COORDINATE WITH THE OWNER/ENGINEER.

16. FOR FACILITIES AND STRUCTURES BEING DEMOLISHED, DISCONNECT ELECTRICAL AND CONTROLS AT BOTH THE SUPPLY SOURCE AND THE POINT OF USE.

17. AT EXISTING FACILITIES, PERFORM ALL ELECTRICAL WORK IN A SEQUENCE AND MANNER THAT MINIMIZES DISTURBANCE TO PLANT OPERATIONS. SEE OTHER SEQUENCE NOTES IN OTHER PARTS OF THE PLANS AND CONTRACT DOCUMENTS. CAREFULLY PLAN AND SCHEDULE ALL WORK REQUIRED. ALL SHUTDOWNS OR INTERRUPTIONS SHALL HAVE PRIOR APPROVAL FROM THE OWNER.

18. MOUNT ALL ELECTRICAL EQUIPMENT, BRACKETS, AND STANDS, ETC. SUCH THAT SHARP EDGES OR CORNERS DO NOT POSE A POTENTIAL HAZARD TO PERSONNEL. GRIND AND SMOOTH EDGES AND CORNERS WHERE DESIRABLE OR REQUIRED.

19. ALL DETAILS, APPURTENANCES, CONNECTIONS, COMPONENTS AND WIRING, ETC. ARE NOT SHOWN. PROVIDE ALL COMPONENTS, DEVICES, ETC., AS REQUIRED FOR A COMPLETE AND PROPERLY OPERATIONAL SYSTEM. PROVIDE THOROUGH AND TIMELY COORDINATION.

20. INSTALL CABLE (INCLUDING FIBER OPTIC CABLE) IN ACCORDANCE WITH MANUFACTURER RECOMMENDATIONS. DO NOT EXCEED MINIMUM RECOMMENDED BEND RADIUS, INCLUDING DURING INSTALLATION AND PULLING.

21. THE CONTRACTOR SHALL USE HIS OWN PADLOCKS TO LOCK OUT ALL BREAKERS AND EQUIPMENT, ETC., WHICH IS NOT SUPPOSED TO BE POWERED OR OPERATED. THE CONTRACTOR SHALL TAKE THE MEASURES NECESSARY TO PREVENT THE OPERATION OF ANY EQUIPMENT (BY THE OWNER OR OTHERS) WHEN IT IS NOT INTENDED TO BE OPERATED. THIS REQUIREMENT APPLIES DURING ALL PHASES OF THE WORK, INCLUDING BUT NOT LIMITED TO, STORAGE, INSTALLATION, TESTING, STARTUP, EARLY PHASES OF OPERATION, TROUBLESHOOTING, REPAIRS, AND MODIFICATIONS, ETC. APPROVAL OF THE MANUFACTURER SHALL BE OBTAINED PRIOR TO MAKING GEAR HOT.

22. CONNECT SINGLE PHASE AND OTHER LOADS IN A MANNER TO BALANCE PHASE LOADING ON THE PANELS AND TRANSFORMERS.

23. WHEN WORKING ON EXISTING OR NEW FACILITIES, BE AWARE THAT PANELS, ETC., ARE OFTEN SUPPLIED FROM MORE THAN ONE POWER SUPPLY. THEREFORE, TURNING OFF THE MAIN DISCONNECT MAY NOT KILL ALL POWER. TAKE APPROPRIATE PRECAUTION.

24. CHECK ALL CIRCUIT BREAKER LABELS BY TURNING OFF BREAKER AND FIELD VERIFYING THAT POWER IS INTERRUPTED AT THE CONTROLLED EQUIPMENT AND DEVICES, ETC. PROVIDE WRITTEN CERTIFICATION ON A FORM PROVIDED BY THE ENGINEER CERTIFYING THAT BREAKERS HAVE BEEN CHECKED TO VERIFY THE ALL LABELS ARE CORRECT.

25. NO CONDUIT OR ELECTRICAL FACILITY OR APPURTENANCE SHALL BE INSTALLED IN A MANNER THAT CREATES A POTENTIAL TRIPPING HAZARD OR AN OBSTRUCTION TO PASSAGE OR HEADROOM, ETC.

26 THE CONTRACTOR SHALL COORDINATE THE WIRING REQUIREMENTS, CONTROLS, ETC, WITH SUBMITTALS AND WITH EQUIPMENT ACTUALLY PROVIDED. MAKE ADJUSTMENTS TO WIRING SCHEDULES AS NECESSARY. NO ADDITIONAL TIME OR COMPENSATION SHALL BE GRANTED FOR SUCH COORDINATION AND ADJUSTMENTS.

27. ALL ANCHOR BOLTS, WEDGE ANCHORS, EPOXY ANCHORS, MOUNTING HARDWARE, ETC. AND APPURTENANCES (I.E. BOLTS, WASHER, NUTS, ETC.) ON THE PROJECT SHALL BE 304 STAINLESS STEEL (MIN.). ALL THREADS ON STAINLESS STEEL BOLTS USED SHALL BE COATED WITH ANTI-GALLING COMPOUND DESIGNED FOR STAINLESS STEEL.

28. ALL EXPOSED CONDUIT, BOXES, FITTINGS, ETC. SHALL BE ALUMINUM, UNLESS NOTED OTHERWISE. FOR CHEMICAL FLOOR OF ADMINISTRATION BUILDING, USE SCHEDULE 40 PVC AND NOT-METALLIC BOXES.

29. ALL CONDUIT, BOXES, PANELS, ETC. SHALL BE INSTALLED USING ALUMINUM OR STAINLESS STEEL UNI-STRUT, HANGERS, BRACKETS, STRUCTURAL MEMBERS, ETC. OR AS APPROVED BY THE ENGINEER. ALL ALUMINUM MOUNTED TO BARE CONCRETE SHALL BE COATED WITH A BITUMASTIC COATING. THE CONTRACTOR SHALL PROVIDE ALL SUPPORTS REQUIRED.

30. POWER HEAT TRACE CIRCUITS FROM TYPE EPD BREAKERS.

31. SIZE AND INSTALL CONDUCTORS AND CONDUIT AS REQUIRED PER NEC.

32. PROVIDE VOLTAGE AND DANGER LABELS ON ALL PANELS, BOXES, SWITCHES, EQUIPMENT, DISCONNECT SWITCHES, ETC.,

33. ALL DISCONNECTS, JUNCTION BOXES, SWITCHES, STARTERS, ETC. INSTALLED IN BUILDINGS SHALL BE IN NEMA 4, DUST TIGHT ENCLOSURES UNLESS NOTED OTHERWISE.

34. ALL BOXES, SWITCHES, DISCONNECTS, JUNCTION BOXES, STARTERS, ETC. IN THE CHEMICAL FLOOR OF THE ADMINISTRATION BUILDING SHALL BE NEMA 4, NON-METALLIC TO THE FULLEST EXTENT POSSIBLE. ALL CONDUIT INSTALLED IN THE CHEMICAL FLOOR SHALL BE PVC.

35. COORDINATE ALL LIGHT LOCATIONS WITH OVERHEAD TRUSSES, BEAMS, COLUMNS, ETC. AND EXISTING LIGHTS. PROVIDE MOUNTING HARDWARE AS REQUIRED. VERIFY EXACT LOCATION OF ALL EQUIPMENT, FIXTURES, FANS, ETC. PRIOR TO INSTALLING CONDUITS.

36. ALL CONDUITS INSTALLED FOR LIGHTS, EQUIPMENT, FIXTURES, ETC. SHALL BE INSTALLED INSIDE BUILDINGS. NO CONDUIT SHALL BE RUN ON THE EXTERIOR OF THE BUILDING.

37. THE CONTRACTOR MAY REUSE ALL EXISTING CONDUIT(S) AND WIRES TO EXISTING LIGHTING TO THE FULLEST EXTENT POSSIBLE AND PRACTICAL.

38. ALL LIGHT SWITCHES AND PUSH BUTTON STATIONS SHALL BE MOUNTED APPROXIMATELY 48" ABOVE THE FINISHED FLOOR ELEVATIONS.

39. MANY EXISTING ELECTRICAL LIGHT CIRCUITS ALSO POWER RECEPTACLES. WHEN NEW LIGHTS ARE INSTALLED, CONTRACTOR SHALL VERIFY RECEPTACLES ARE RE-POWERED OR PLACED ON DEDICATED INDEPENDENT UNUSED CIRCUITS.

40. NEW SWITCHES, PANELS, STARTERS, DISCONNECTS, AND ALL OTHER ELECTRICAL EQUIPMENT ETC. ARE NOT SHOWN IN EXACT LOCATIONS. THE FINAL LOCATIONS SHALL BE COORDINATED WITH OWNER/ENGINEER DURING CONSTRUCTION.

41. THE CONTRACTOR SHALL BE AWARE OF THE HIGH VOLTAGE POWER LINES THAT EXTEND OVER AND THROUGH THIS SITE. COORDINATE WITH THE POWER COMPANY FOR ALL SHUTDOWNS (IF ANY) OUTAGES, ETC. COORDINATE WITH THE OWNER/ENGINEER.

SINGLE LINE DIAGRAM

ADDITIONS TO EXISTING PANELS LB AND LD

NOTES:

1. REMOVE 3 EXISTING 120 VOLT CIRCUITS TO ALLOW SPACE FOR NEW 70/3 BREAKER TO FEED NEW PANELS LBEA AND LDEB.
2. 4-#6'S & 1-#12G IN 1.25" CONDUIT
3. 70 AMP 120/208 VOLT PANEL WITH THE FOLLOWING BREAKERS:
   2 - 30/3 FOR EXHAUST FANS
   1 - 30/3 FOR SPD
   9 - 20/1 FOR NEW CIRCUITS

GENERAL ELECTRICAL LEGEND

A 2	FIXTURE OUTLET - CEILING - SURFACE OR PENDANT MOUNTED - FIXTURE MARK "A", CIRCUIT NO.2 (TYP.).
A	FIXTURE OUTLET - CEILING - SURFACE OR PENDANT MOUNTED
A	FIXTURE OUTLET - WALL/CEILING - SURFACE OR PENDANT MOUNTED
	WALL OUTLET - DUPLEX - 20A - 125V - 2P - 3W - GROUNDING - HUBBELL 5362.
WP	WALL OUTLET - DUPLEX - 15A - 125V - 2P - 3W - GROUNDING - "GFI" TYPE WEATHERPROOF - HUBBELL GF-5362 WITH WEATHERPROOF PLATE.
	WALL OUTLET - DUPLEX - 20A - 125V - 2P - 3W - GROUNDING - "GFI" TYPE - HUBBELL GF-5362.
J	WALL OUTLET - JUNCTION BOX - FLUSH MOUNTED.
J	CEILING OUTLET - JUNCTION BOX.
$	SWITCH OUTLET - S.P.S.T. - 15A - 120-277VAC - HUBBELL 1201.
$3	SWITCH OUTLET - 3 WAY - 15A - 120-277VAC - HUBBELL 1203.
$4	SWITCH OUTLET - 4 WAY - 15A - 120-277VAC - HUBBELL 1204.
$a	SWITCH OUTLET - CONTROLS OUTLET "a", ETC.
$x	SWITCH OUTLET - MANUAL MOTOR STARTER - TOGGLE TYPE - 2 POLE - SQUARE "D" TYPE KS-1.
$m	SWITCH OUTLET - MOMENTARY CONTACT TO CONTROL RELAYS
	MAGNETIC MOTOR STARTER.
	DISCONNECT SWITCH - FUSED.
	DISCONNECT SWITCH - NONFUSED.
M	MOTOR OUTLET - SIZE AS SHOWN.
UH	UNIT HEATER - ELECTRICAL - ARROW INDICATES DIRECTION - SEE SCHEDULE.
PT	PRESSURE TRANSMITTER
	PUSHBUTTON STATION W/ LOCK-OUT STOP BUTTON W/ PADLOCK ATTACHMENT
A	NEW FIXTURE WITH NEW WIRING
A REX	REMOVE EXISTING FIXTURE AND REPLACE WITH NEW
	INDICATES FIXTURE TO BE FURNISHED WITH 90 MINUTE BATTERY BACK-UP ON POWER FAILURE
RW	RELAY 120V 20 AMP IN NEMA 4x ENCLOSURE. WIRELESS CONTROL
X	NEW LED EXIT LIGHT WITH 90 MINUTE BATTERY BACK-UP ON POWER FAILURE
	EXISTING CONDUIT AND WIRE. REMOVE WIRE AND INSTALLATION.
	NEW WIRING IN CONDUIT (PVC FOR LEVEL 2. ALUMINUM IN ALL OTHER AREAS)

LIGHTING FIXTURE SCHEDULE

MARK	FIXTURE MFG	CATALOG NO.	LAMPS			MOUNTING HEIGHT	MOUNTING TYPE	REMARKS
			WATTS	LUMENS	TYPE			
A	LITHONIA	IBHST-15000LM-SD080-MD-MVOLT-40K-80CRI-WH	140	14,218 LUMENS	LED	CEILING OR AS DIR.	OUTLET BOX	120V - SUSPEND FROM CEILING
B	LITHONIA	FEM-L48-8000LM-IMAFD-MD-MVOLT-40K-80CRI	69	8,000 LUMENS	LED	ON CEILING OR TRUSSES OR HANGING	OUTLET BOX	120V - SUSPENDED FROM CEILING OR UNDER ENCLOSURE CEILING
C	LITHONIA	DSXF2 LED-P2-40K-FL-MVOLT-THK-	78	10,531 LUMENS	LED	AS HIGH AS POSSIBLE ON WALL OR AS INDICATED	OUTLET BOX	120V - OUTDOOR - MOUNTED ON SIDE OF BUILDING WITH KNUCKLE OR BRACKET.
D	LITHONIA	OFTH 300PR-120-WH WITH GENERAL ELECTRIC PAR 38 BRIGHT WHITE LED LIGHT	32	3,100 LUMENS	LED	ON TRUSSES OR HANGING ON CEILING	OUTLET BOX OR JUNCTION BOX	120V - 2 BULBS PER FIXTURE (4 TOTAL) - FIXTURES MOUNTED ON SIDE OF JUNCTION BOX. 1 BULB FACING EACH QUADRANT OF EACH FILTER BASIN.
X	LITHONIA	DSXF2 LED-P2-40K-FL-MVOLT-THK-	10		LED	ON TRUSSES OR HANG FROM CEILING ABOVE THE DOOR	OUTLET BOX	EXIT LIGHT WITH 90 MINUTE BATTERY BACKUP.

NOTES:

WHERE "B" FIXTURE SHOWN IN STAIRS, CONNECT THEM TO OVERRIDE THEIR ON-OFF SWITCH WHEN POWER FAILS.

Municipal Consultants, Inc.
200 Century Park South, Suite 212
Birmingham, Alabama 35226
(205) 822-0387

SHELBY COUNTY COMMISSION

TALLADEGA/SHELBY WTP BUILDING IMPROVEMENTS

2020

ALABAMA No. 8068 PROFESSIONAL ENGINEER FRANK M. CATER
6/24/20
NOT VALID WITHOUT SIGNATURE

BAR = 1"

Title: ELECTRICAL NOTES, LEGEND, & DETAILS

Drawing: BID SET

Project No.:

Date: 6-2020

Scale: N.T.S.

Sheet: 32

COPYRIGHT © MUNICIPAL CONSULTANTS, INC.

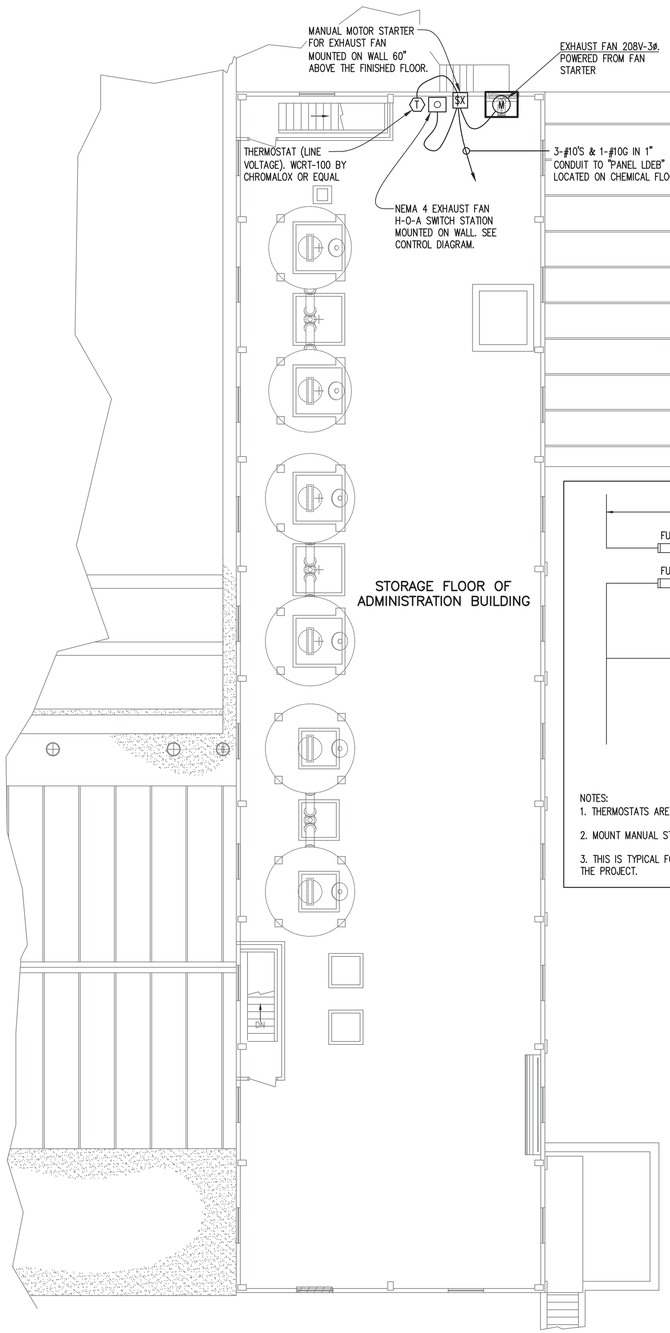

ELECTRICAL PLAN (LEVEL 3)

SCALE: 1/8" = 1'-0"

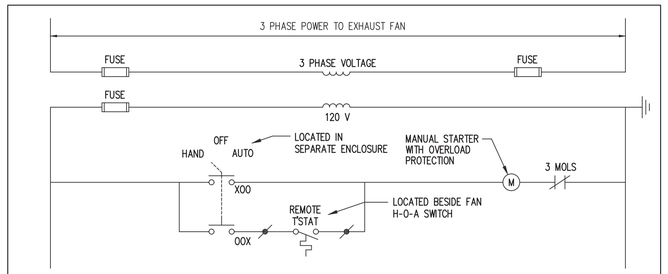

EXHAUST FAN CONTROL DIAGRAM

TYPICAL FOR 3-PHASE FANS

NOTES:
1. THERMOSTATS ARE REMOTE MOUNTED, 48" AFF.

2. MOUNT MANUAL STARTER NEAR THERMOSTAT.

3. THIS IS TYPICAL FOR ALL EXHAUST FANS ON THE PROJECT.

NOTES:
1. THERE ARE CURRENTLY EXISTING LIGHTS IN MANY OF THE LOCATIONS SHOWN. THE CONTRACTOR SHALL REMOVE AND REPLACE LIGHTS WITH ONES INDICATED. THE EXISTING LIGHTING INSIDE AND OUTSIDE THESE BUILDINGS ARE POWERED FROM EITHER EXISTING PANEL LD OR PANEL LB. ALL EXISTING CONDUIT(S) AND WIRES TO EXISTING LIGHTING MAY BE REUSED TO THE FULLEST EXTENT POSSIBLE AND PRACTICAL. CONTRACTOR SHALL UTILIZE EXISTING CIRCUITS AND PROVIDE NEW AS REQUIRED FOR NEW LIGHTING AND EXISTING RECEPTACLES.

2. COORDINATE LIGHT LOCATIONS WITH OVERHEAD TRUSSES AND EXISTING LIGHTS. PROVIDE MOUNTING HARDWARE AS REQUIRED.

3. CONDUITS FOR ALL LIGHTS, EQUIPMENT, FIXTURES, ETC. SHALL BE INSTALLED INSIDE BUILDINGS AND ATTACHED TO BUILDING WALL AND TRUSS MEMBERS TO THE MAXIMUM EXTENT POSSIBLE TO YIELD AN UNCLUTTERED APPEARANCE WITHOUT TRIPPING HAZARDS OR OBSTRUCTIONS TO MOVEMENT.

4. VERIFY EXACT LOCATION OF ALL EQUIPMENT, FIXTURES, FANS, ETC. PRIOR TO INSTALLING CONDUITS.

5. LIGHT SWITCHES AND FAN CONTROLS SHALL BE MOUNTED APPROXIMATELY 48" ABOVE THE FINISHED FLOOR ELEVATIONS.

6. MANY ELECTRICAL LIGHT CIRCUITS ALSO POWER RECEPTACLES. WHEN NEW LIGHTS ARE INSTALLED, CONTRACTOR SHALL VERIFY RECEPTACLES ARE RE-POWERED OR PLACE ON DEDICATED INDEPENDENT UNUSED CIRCUIT.

7. CONTRACTOR SHALL INSTALL NEW CONDUIT AND WIRE FROM EXISTING LP PANEL TO NEW EXHAUST FAN AND CONTROLS AS REQUIRED. ROUTE INSIDE BUILDING.

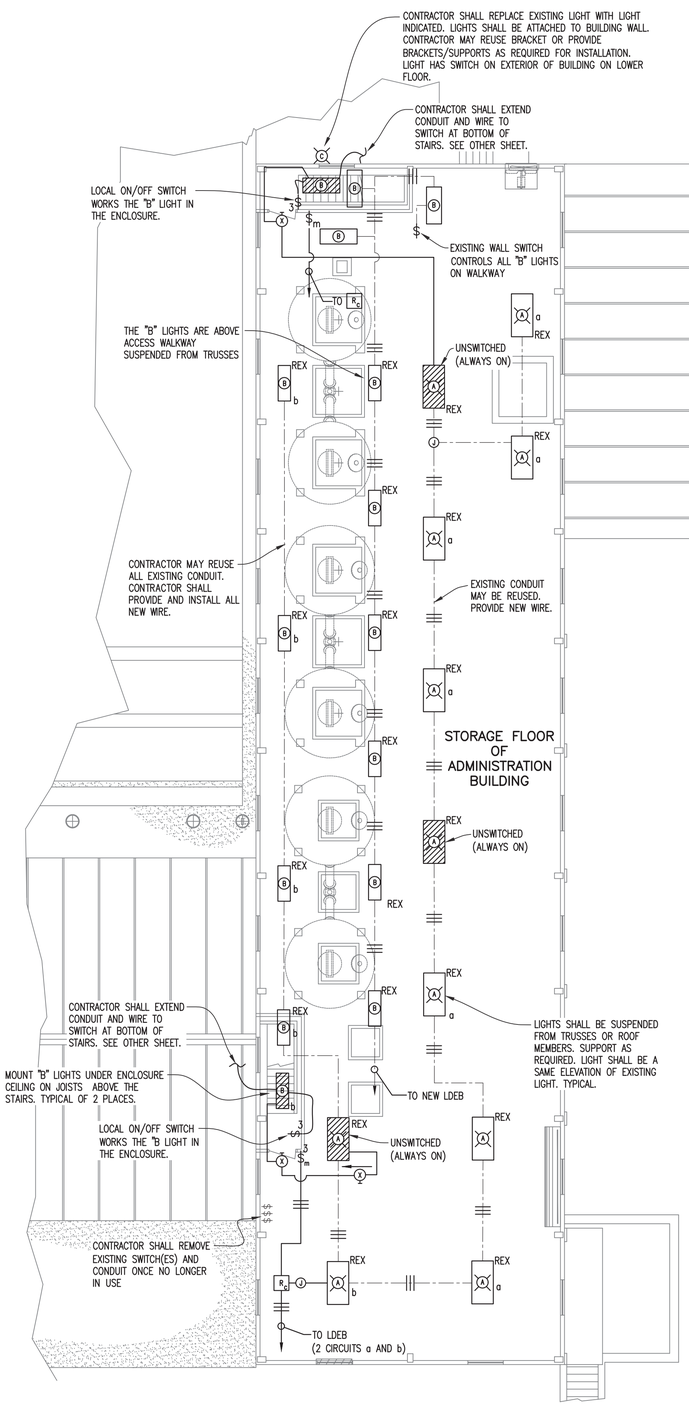

LIGHTING PLAN (LEVEL 3)

SCALE: 1/8" = 1'-0"

COPYRIGHT © MUNICIPAL CONSULTANTS, INC.

Municipal Consultants, Inc.
200 Century Park South, Suite 212
Birmingham, Alabama 35226
(205) 822-0387

SHELBY COUNTY COMMISSION

TALLADEGA/SHELBY WTP BUILDING IMPROVEMENTS

2020

ALABAMA LICENSED PROFESSIONAL ENGINEER FRANK M. CARTER No. 31358
9/24/20
NOT VALID WITHOUT A SIGNATURE

BAR = 1"

Title	STORAGE FLOOR ELECTRICAL & LIGHTING PLAN
Drawing	BID SET
Project No.	
Date	6-2020
Scale	1/8"=1'
Sheet	33

UNIT HEATER SCHEDULE						
MARK	QUANTITY	HEATER MFG	CATALOG NO.	VOLTAGE	PHASE	REMARKS
UH-1	5	REZNOR	UDAP125	120	1	

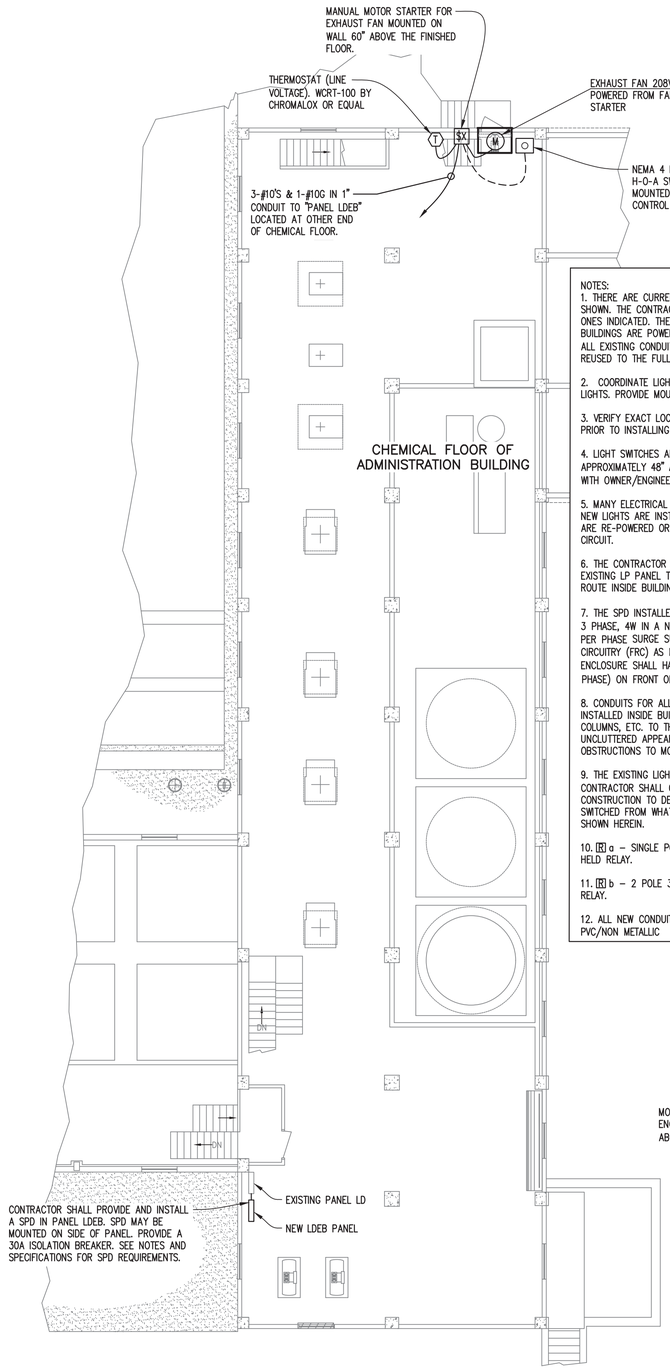

NOTES:

1. THERE ARE CURRENTLY EXISTING LIGHTS IN MANY OF THE LOCATIONS SHOWN. THE CONTRACTOR SHALL REMOVE AND REPLACE LIGHTS WITH ONES INDICATED. THE EXISTING LIGHTING INSIDE AND OUTSIDE THESE BUILDINGS ARE POWERED FROM EITHER EXISTING PANEL LD OR PANEL LB. ALL EXISTING CONDUIT(S) AND WIRES TO EXISTING LIGHTING MAY BE REUSED TO THE FULLEST EXTENT POSSIBLE AND PRACTICAL.

2. COORDINATE LIGHT LOCATIONS WITH OVERHEAD BEAMS AND EXISTING LIGHTS. PROVIDE MOUNTING HARDWARE AS REQUIRED.

3. VERIFY EXACT LOCATION OF ALL EQUIPMENT, FIXTURES, FANS, ETC. PRIOR TO INSTALLING CONDUITS.

4. LIGHT SWITCHES AND FAN CONTROLS SHALL BE MOUNTED APPROXIMATELY 48" ABOVE THE FINISHED FLOOR ELEVATIONS. COORDINATE WITH OWNER/ENGINEER FOR EXACT LOCATIONS.

5. MANY ELECTRICAL LIGHT CIRCUITS ALSO POWER RECEPTACLES. WHEN NEW LIGHTS ARE INSTALLED, CONTRACTOR SHALL VERIFY RECEPTACLES ARE RE-POWERED OR PLACED ON DEDICATED INDEPENDENT UNUSED CIRCUIT.

6. THE CONTRACTOR SHALL INSTALL NEW CONDUIT AND WIRE FROM EXISTING LP PANEL TO NEW EXHAUST FAN AND CONTROLS AS REQUIRED. ROUTE INSIDE BUILDING.

7. THE SPD INSTALLED AT THE NEW PANEL SHALL BE A 208/120V WYE, 3 PHASE, 4W IN A NEMA 4 ENCLOSURE. SPD SHALL BE A 120KA (MIN.) PER PHASE SURGE SUPPRESSOR (SPD) WITH FREQUENCY RESPONSIVE CIRCUITRY (FRC) AS MANUFACTURED BY SURGE SUPPRESSION INC. SPD ENCLOSURE SHALL HAVE INDICATING LIGHTS (STATUS LIGHTS FOR EACH PHASE) ON FRONT OF ENCLOSURE.

8. CONDUITS FOR ALL LIGHTS, EQUIPMENT, FIXTURES, ETC. SHALL BE INSTALLED INSIDE BUILDINGS AND ATTACHED TO BUILDING WALL, BEAMS, COLUMNS, ETC. TO THE MAXIMUM EXTENT POSSIBLE TO YIELD AN UNCLUTTERED APPEARANCE WITHOUT TRIPPING HAZARDS OR OBSTRUCTIONS TO MOVEMENT.

9. THE EXISTING LIGHTING IS FED FROM MULTIPLE CIRCUITS. THE CONTRACTOR SHALL COORDINATE WITH THE OWNER/ENGINEER DURING CONSTRUCTION TO DETERMINE WHICH LIGHTS WILL BE POWERED AND SWITCHED FROM WHAT CIRCUIT. THIS MAY BE DIFFERENT FROM WHAT IS SHOWN HEREIN.

10. [R] a – SINGLE POLE 30 AMP ELECTRICALLY OPERATED MECHANICALLY HELD RELAY.

11. [R] b – 2 POLE 30 AMP ELECTRICALLY OPERATED MECHANICALLY HELD RELAY.

12. ALL NEW CONDUIT AND BOXES INSTALLED ON THIS FLOOR SHALL BE PVC/NON METALLIC

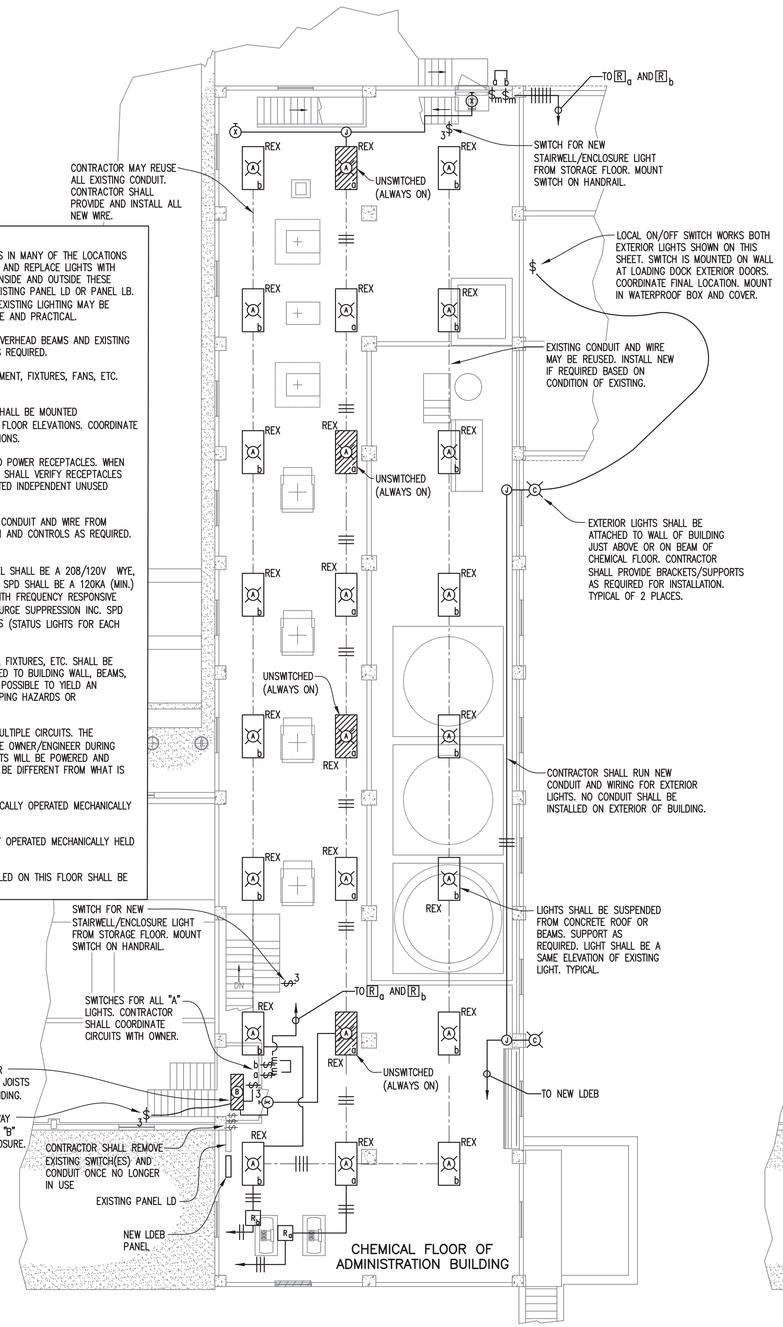

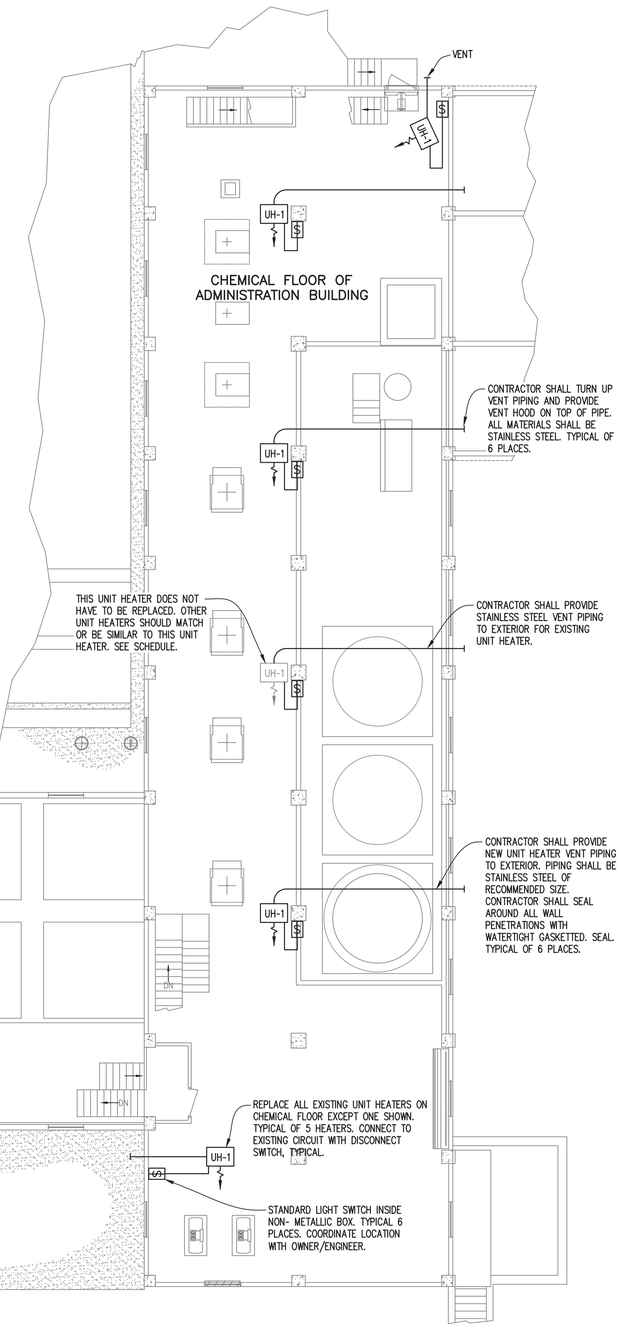

ELECTRICAL PLAN (LEVEL 2)
SCALE: 1/8" = 1'-0"

LIGHTING PLAN (LEVEL 2 – CHEMICAL FLOOR)
SCALE: 1/8" = 1'-0"

UNIT HEATER PLAN (LEVEL 2 – CHEMICAL FLOOR))
SCALE: 1/8" = 1'-0"

Municipal Consultants, Inc.
200 Century Park South, Suite 212
Birmingham, Alabama 35226
(205) 822-0387

SHELBY COUNTY COMMISSION
TALLADEGA/SHELBY WTP
BUILDING IMPROVEMENTS
2020

ALABAMA No. 8068 PROFESSIONAL ENGINEER FRANK M. CATER
8/24/20
NOT VALID WITHOUT SIGNATURE

BAR = 1"

Title: CHEMICAL FLOOR ELECTRICAL, LIGHTING, & UNIT HEATER PLAN

Drawing	BID SET
Project No.	
Date	6-2020
Scale	1/8"=1'
Sheet	34

COPYRIGHT © MUNICIPAL CONSULTANTS, INC.

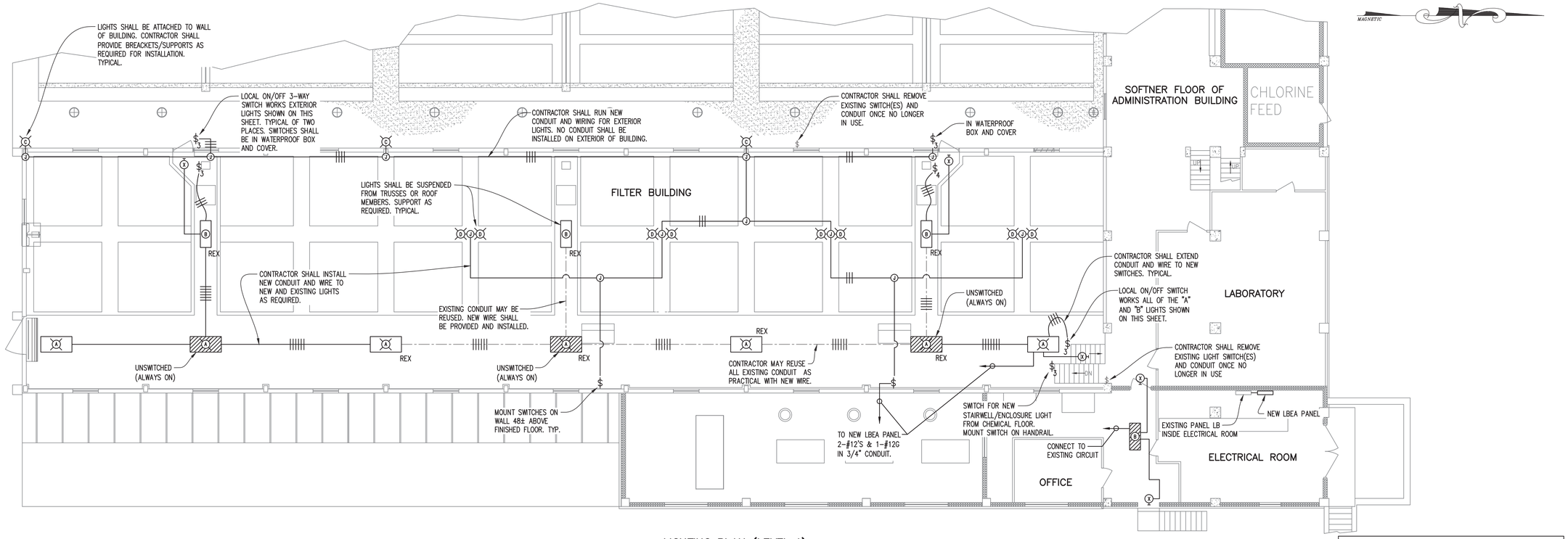

LIGHTING PLAN (LEVEL 1)

SCALE: 1/8" = 1'-0"

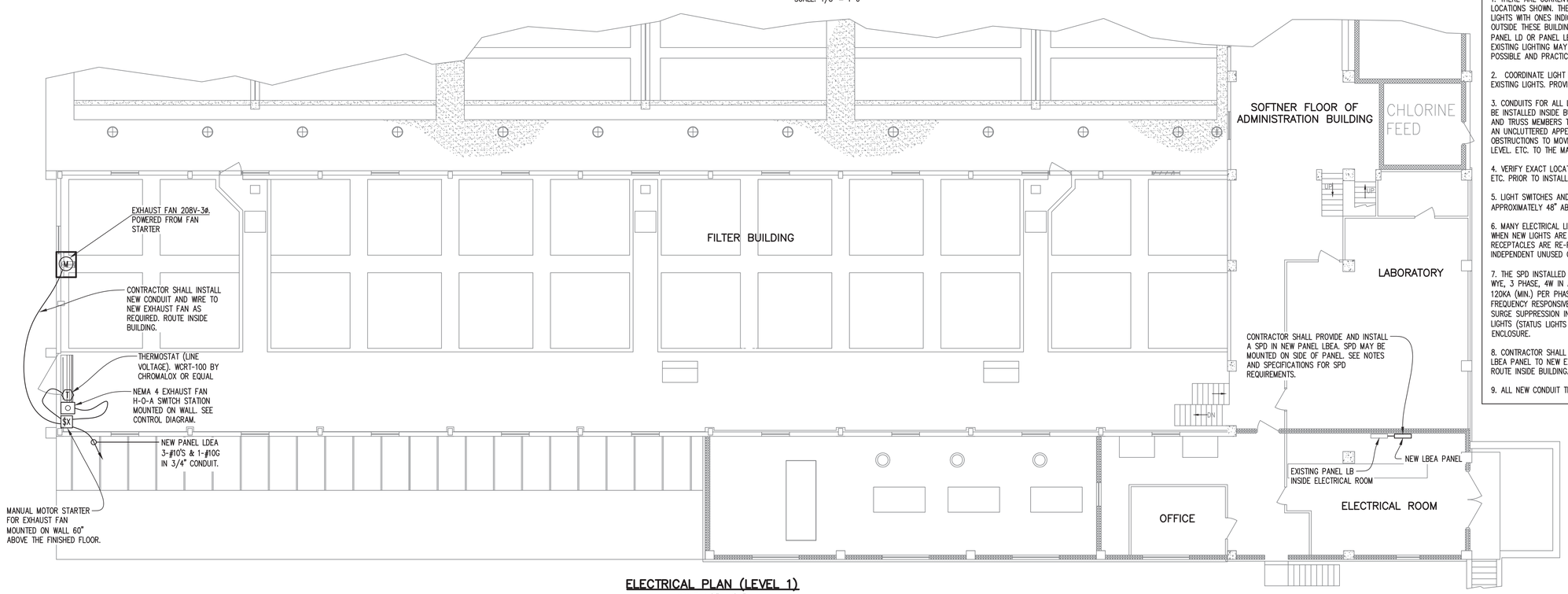

ELECTRICAL PLAN (LEVEL 1)

SCALE: 1/8" = 1'-0"

NOTES:

1. THERE ARE CURRENTLY EXISTING LIGHTS IN MANY OF THE LOCATIONS SHOWN. THE CONTRACTOR SHALL REMOVE AND REPLACE LIGHTS WITH ONES INDICATED. THE EXISTING LIGHTING INSIDE AND OUTSIDE THESE BUILDINGS ARE POWERED FROM EITHER EXISTING PANEL LD OR PANEL LB. ALL EXISTING CONDUIT(S) AND WIRES TO EXISTING LIGHTING MAY BE REUSED TO THE FULLEST EXTENT POSSIBLE AND PRACTICAL.

2. COORDINATE LIGHT LOCATIONS WITH OVERHEAD TRUSSES AND EXISTING LIGHTS. PROVIDE MOUNTING HARDWARE AS REQUIRED.

3. CONDUITS FOR ALL LIGHTS, EQUIPMENT, FIXTURES, ETC. SHALL BE INSTALLED INSIDE BUILDINGS AND ATTACHED TO BUILDING WALL AND TRUSS MEMBERS TO THE MAXIMUM EXTENT POSSIBLE TO YIELD AN UNCLUTTERED APPEARANCE WITHOUT TRIPPING HAZARDS OR OBSTRUCTIONS TO MOVEMENT. CONDUITS TO BE RUN NEAT, PLUMB, LEVEL. ETC. TO THE MAXIMUM EXTENT POSSIBLE.

4. VERIFY EXACT LOCATION OF ALL EQUIPMENT, FIXTURES, FANS, ETC. PRIOR TO INSTALLING CONDUITS.

5. LIGHT SWITCHES AND FAN CONTROLS SHALL BE MOUNTED APPROXIMATELY 48" ABOVE THE FINISHED FLOOR ELEVATIONS.

6. MANY ELECTRICAL LIGHT CIRCUITS ALSO POWER RECEPTACLES. WHEN NEW LIGHTS ARE INSTALLED, CONTRACTOR SHALL VERIFY RECEPTACLES ARE RE-POWERED OR PLACE ON DEDICATED INDEPENDENT UNUSED CIRCUIT.

7. THE SPD INSTALLED ON THE LBEA PANEL SHALL BE A 208/120V WYE, 3 PHASE, 4W IN A NEMA 4 ENCLOSURE. SPD SHALL BE A 120KA (MIN.) PER PHASE SURGE SUPPRESSOR (SPD) WITH FREQUENCY RESPONSIVE CIRCUITRY (FRC) AS MANUFACTURED BY SURGE SUPPRESSION INC. SPD ENCLOSURE SHALL HAVE INDICATING LIGHTS (STATUS LIGHTS FOR EACH PHASE) ON FRONT OF ENCLOSURE.

8. CONTRACTOR SHALL INSTALL NEW CONDUIT AND WIRE FROM NEW LBEA PANEL TO NEW EXHAUST FAN AND CONTROLS AS REQUIRED. ROUTE INSIDE BUILDING.

9. ALL NEW CONDUIT THIS LEVEL TO BE ALUMINUM.

Municipal Consultants, Inc.
200 Century Park South, Suite 212
Birmingham, Alabama 35226
(205) 822-0367

SHELBY COUNTY COMMISSION

TALLADEGA/SHELBY WTP
BUILDING IMPROVEMENTS

2020

ALABAMA PROFESSIONAL ENGINEER No. 8068 FRANK M. CALER
6/24/20
NOT VALID WITHOUT SIGNATURE

BAR = 1"

Title: FILTER BUILDING ELECTRICAL & LIGHTING

BID SET

Drawing	
Project No.	
Date	6-2020
Scale	1/8"=1'
Sheet	35

COPYRIGHT © MUNICIPAL CONSULTANTS, INC.