ADDENDUM #2

Shelby County Department of Development Services
HWY 280 Shelby County Services Building

TO: All Bidders DATE: 20 March 2020

This addendum forms a part of the Contract Documents and modifies the original Bid Documents dated March 6, 2020. Acknowledge receipt of this Addendum by inserting its number in the Bid Form. Failure to do so may subject Bidder to disqualification. This serves as an addendum to the construction documents and modifies and/or supplements them as follows:

I. CLARIFICATIONS & SUBSTITUTION REQUESTS

1. **Clarifications:**
   a. The sidewalk control joints are required every 5' minimum and the final locations are to be coordinated with the architect at a later date.
   b. Shower curtains and hooks are to be provided by Owner and installed by the GC.
   c. Mark-ups on attached Mechanical Sheets will be formally issued in the Conformance Set at a later date.
   d. Third party testing of spray-applied fireproofing is to be done by Owner.

2. **Request for Substitution – NOT APPROVED:**
   a. 08 3323 Overhead Coiling Doors – FireStar 700 Series Fire Doors by Wayne Dalton
   b. 09 6620 Epoxy Terrazzo Flooring – Terrazzco Brand Product by Concord Terrazzo Company
   c. 23 7343 Air Handling Units – Dunham Bush
   d. 23 6423 Air Cooled Water Chillers – Dunham Bush

3. **Request for Substitution – APPROVED:**
   a. 23 2113.13 Underground Hydronic Piping – Energy Task Force Type EMT
   b. 23 2116 Hydronic Piping Specialties – Calibrated-Orifice Balancing Valves – Griswold Controls QuickSet
   c. 23 2116 Hydronic Piping Specialties – Bladder Type Expansion Tanks – Wheatley Model BDT
   d. 23 8123.12 Computer Room Air Conditioners – Compu-Aire
   e. 23 8129 Variable Refrigerant-Flow HVAC Systems – Samsung

II. BIDDER QUESTIONS:

1. **Question:** The specs 10-1400 page 2 of 3. Paragraph 2.03 says Owners specific Requirements for production, shows a sign we have made many times and is the standard for Auburn University and then paragraph A2.04 confuses the issue by detailing two completely different type signs. The signage details on A2.04 match the flat signs, A2.04A. Please clarify which sign type. A2.04 calls for a flat sign with no frame and a curved sign which requires a frame. The sign details appear to be the flat sign.
   Response: Specification Section 10 1400 Signage is revised in this Addendum.

2. **Question:** ADA Signage:
   a. The spec sheets show a photo of a sign with 4 panels and the architectural sheets show an entirely different sign design. What design are we to follow? The architectural plans or the photo? If going by the photo we will need sizing for each sign type.
   b. Are the signs to be in an aluminum frame?
   c. Can we provide comparable sign system for equal or better? Looking to keep the cost down.
   Response: Specification Section 10 1400 Signage is revised in this Addendum.

3. **Question:** Specification 051200-1.6-A requires the structural steel fabricator to be AISC certified. Can this requirement be waived?
   Response: This requirement cannot be waived.

4. **Question:** There is currently no door hardware schedule/specification in the bid documents. Please provide.
   Response: Specification Section 08 7100 Architectural Hardware is included in this Addendum.

5. **Question:** There are precast terrazzo treads in the terrazzo spec. Please confirm there are not any treads in the project. If there, please advise us of the location.
   Response: There are no terrazzo treads in this project. Specification Section 09 6620 Epoxy Terrazzo Flooring is revised in this Addendum.

6. **Question:** We don't see the finish hardware spec in the documents. Please point us to it or let us know when to expect it.
   Response: Specification Section 08 7100 Architectural Hardware is included in this Addendum.

7. **Question:** Please indicate where the Marlite panels (spec 09 7710 prefinished architectural wall panel systems) are located. Also confirm that these panels differ from the WD1 walls.
   Response: There are no Marlite panels in this project. Specification Section 09 7710 Prefinished Architectural Wall Panel Systems is deleted in this Addendum.

8. **Question:** Will you consider block with concrete fill in lieu of poured concrete walls. If the walls remain poured, it appears that the walls do not go floor to floor but straight through. Is this correct? If so, can we go floor to floor?
   Response: CMU block walls are not appropriate because of the storm shelter requirements. It is acceptable to provide a pour break at 18" above second floor finish floor (not top of slab).

9. **Question:** There are currently no specifications for landscaping. Per sheet L200 "All trees and shrubs not covered by irrigation to be amended with terra sorb (or approved equal) water retaining agent as per manufacturers recommendations. All trees to have gator bags...". Will the irrigation be design-build or will an irrigation plan be released?
   Response: Per Owner, no irrigation is to be installed. Product cutsheets for Terra-Sorb and Treegator are provided as basis of design in this Addendum**.**

10. **Question:** We regret we are unable to quote this project at this time. We would like to qualify our reasons for doing so. The architect/engineer for this project has set forth some requirements in their specifications that will be difficult for a most steel fabricators to meet. One item in particular is their requirements for design calculations. We have no problem providing standard design calculations. However, their requirement for stamped shop drawings with elaborate notations for the design calcs would be extremely time consuming and cost prohibitive. In addition, Joist and Deck supplier's will not furnish stamped shop drawings under any circumstances. They will furnish standard design calcs. Also, we do not have sand-blasting facilities and cannot quote such. Our process of power-tool cleaning furnishes a product that is most cases cleaner than commercial sandblasting. We also would not furnish the "Checklists" noted in the specifications as they should not be required. These requirements go way beyond AISC standards. Due to the above, we do not feel we can offer a competitive quotation for this project. If you find that the above items can be waived or changed, please let us know and we will re-consider.
    Response:
    a. Design calculations for steel – SDG is requiring stamped shear connection calculations for all beam-to-column connections per the general notes. The calculations should be labeled on a plan of each level, so we know which connection refers to which beam reaction.
    b. Joist and deck shop drawings – SDG is requiring the joist cut sheets showing the SP joists have been designed for the loads indicated on plan, in this case the wind reactions from parapet walls and mechanical units.
    c. For steel exposed to view, sand blast cleaning is required for the Tnemec 90-97 coating shown in the spec. If they can provide an alternate that meets or exceeds the coating and does not require the sandblasting, then the contractor is welcome to submit that for review.

11. **Question:** Is the civil CAD file available?

Response: The civil CAD file is not available at this time.

12. **Question:** I cannot locate Corner Guards on the plans. Is specification section 102601 required?
    Response: The finish plans are revised to include corner guard locations in this Addendum.

13. **Question:** Please provide Hardware specifications.
    Response: Specification Section 08 7100 Architectural Hardware is included in this Addendum.

14. **Question:** Please provide a specification for the slat wall wood at the drive thru kiosk.
    Response: Specification section 06 2000 was revised in Addendum #1. See part 2.01 C. 1. for exterior carpentry.

15. **Question:** Could you provide a spec for the sliding gate & controller or point me to it if we have missed it?
    Response: Drawings A1.0 and A1.2 are revised to include this information in this Addendum.

16. **Question:** In spec 074213 for ACM metal panels, it calls for a wet seal ACM panels system. Wet Seal Panel system require sealant in all the ACM panels joints. On the Architectural Drawings all the details are drawn using a spline joint ACM panel system or a dry joint panel system. Example: Reference A.08 Typical Exterior Details. Please clarify which we are to quote: WET SEAL – Using Sealant or DRY SEAL – Using Splines?
    Response: WET SEAL system is to be provided.

17. **Question:** The finish plans show Corner Guards (CG) in the legend but don't appear on the floor plans. Please advise where these are located and if any other items in 102601 wall and corner protection spec are required.
    Response: The finish plans are revised to include corner guard locations in this Addendum.

18. **Question:** Aluminum storefront and curtain wall specifications call for Class 1 Clear anodized finish and a 15-year (storefront) and 20-year (curtain wall) finish warranty. Manufacturer's specified only warranty Class 1 Clear anodized for 10-years.
    A. 15 or 20-year finish will require a 2-Coat Kynar painted finish. Please provide direction.
    Response: Both specifications call for Class 1 Color anodized finish.

19. **Question:** Aluminum curtain wall specification calls for a 7-year material warranty. Manufacturer's specified only warranty materials for a maximum of 5-years. Please provide direction.
    Response: 5-year warranty is acceptable.

20. **Question:** Please confirm that it is the Contractor or Glazing Subcontractor's responsibility to pay for and perform all field testing associated with the aluminum storefront and curtain wall systems.
    Response: The Owner is responsible for costs associated with field testing of windows provided that all windows pass on the first test.

21. **Question:** Note on Sheet A0.5 calls for sill pans and extruded end dams at both storefront and curtain wall openings. Curtain wall system specified does not require sill pans and end dams. Is it acceptable to NOT use sill pans and end dams at the curtain wall locations?
    Response: Provide sill pans at storefront windows only.

22. **Question:** Storefront system details shown on Sheet A0.6 and A0.7 show a caulk line to the dry line (air barrier). Aluminum storefront system specified is NOT tested for backer rod and caulk bead to the air barrier and will NOT pass specified testing without the exterior perimeter bead applied.
    a. A Dow Corning Silicone transition strip can be used by the glazing subcontractor in lieu of the backer rod and caulk bead as shown to close the Storefront system off to the air barrier; or
    b. The Curtain wall system specified can accommodate the details as drawn on the Architectural drawings.
    c. Questions:
        i. Should a silicone membrane be used with the storefront system? Or

ii. Should the specified Curtain wall system be used with the backer rod and sealant to the air barrier in lieu of the storefront system?

Response: A silicon membrane is acceptable. GC to verify silicon membrane is compatible with the specified air barrier.

23. **Question:** Mock-up drawing on Sheet A4.3 does not have aluminum curtain wall included. Will there be a separate mock-up with aluminum curtain wall?
Response: Samples of curtain wall are required per specification. Mock-up is not required.

24. **Question:** 09 21 16 Gypsum Board Assemblies lists Type X paper-faced gypsum board for vertical surfaces and ceilings. It further lists glass mat panels, unfaced fiber-reinforced gypsum panels. Under 2.03 Board Materials, D.1., it states "Mold Resistance is required at all locations". Is your intent to have Mold Resistant gypsum board at *all* locations?
Response: Paper faced products should not be used prior building dry in and should the contractor elect to install paper faced products prior to Dry In then they are working at their own risk but should be using only listed paperless mold resistant drywall.

25. **Question:** Reference Wall Types 1.2 through 1.6 and 2.1 through 2.7. The poured-in-place concrete is assumed to provide the one- or two-hour fire rating. Where there are metal framed partitions adjacent to these PIP partitions, can these be terminated above the finish ceiling where applicable?
Response: Yes. Fire ratings come from the concrete walls.

26. **Question:** Need to know what the Veneer Species is, it mentions "as specified above", but nothing tells us what the veneer actually is in these Specs or on the Drawings.
Response: The species is rift cut white oak.

27. **Question:** Glazing Specification 088000 2.03-A through F lists 6 different glass types for what appears to be interior application, however neither the Door Schedule (A0.3) nor the window schedule (A0.5) give any glass types. Please provide where the 6 interior glass types are to be used.
Response: G1, SG1, SG2, and TMG1 are the only interior glass types. All other glass types are part of the exterior window system.

III. PROJECT MANUAL:

1. **Specification Section 00 0000** Table of Contents:
   a. Add Section 06 4200 Wood Paneling
   b. Add Section 08 7100 Architectural Hardware
   c. Remove Section 09 7710 Prefinished Architectural Wall Panel Systems
   d. Add Section 10 5723 Closet and Utility Shelving

2. **Specification Section 01 3010** Administrative Requirements: Omit paragraphs H & I in paragraph 3.07 Progress Photographs. Hardcopy prints are not required.

3. **Specification Section 01 7800** Closeout Submittals – For clarification purposes, Part 3 Execution outlines tasks and submittals that the General Contractor is to provide. The Architect is not responsible for preparation of As-built documentation or other required components of project closeout.

4. **Specification Section 06 4200** Wood Paneling: This section is added in this Addendum.

5. **Specification Section 08 3000** Tornado Resistant Opening Systems: This section is revised in this Addendum to include hardware sets for storm doors.

6. **Specification Section 08 7100** Architectural Hardware: This section is added in this Addendum.

7. **Specification Section 09 6620** Epoxy Terrazzo Flooring: This section is revised to remove terrazzo treads and risers in this Addendum.

8. **Specification Section 09 7710** Prefinished Architectural Wall Panel Systems: This section is removed in this Addendum.

9. **Specification Section 10 1400** Signage: This section is revised in this Addendum.

10. **Specification Section 10 5723** Closet and Utility Shelving: This section is added in this Addendum.

IV. DRAWINGS:

ARCHITECTURAL

1. **A0.3 DOOR SCHEDULE**
   a. Add card reader and associated hardware to Door 210. This will be updated in the Conformance Drawing Set issued after the Bid.
   b. Added hardware sets to the door schedule.

2. **A0.8 TYPICAL EXTERIOR DETAILS**
   a. Refer to metal panel system details for revisions. Clarified linework, notes, dimensions, etc. Refer to clouded revision on sheet.

3. **A2.1A FIRST FLOOR DIMENSION PLAN**
   a. Added control joints to plans. See clouded locations on plan.

4. **A2.2A SECOND FLOOR DIMENSION PLAN**
   a. Added wall bump out. See clouded area on sheet.
   b. Revised walls at Stair #2 to be 2-HR rated. Refer to clouded revision on sheet.

5. **A2.3A THIRD FLOOR DIMENSION PLAN**
   a. Revised walls at Stair #2 to be 2-HR rated. Refer to clouded revision on sheet.

6. **A3.1 FIRST FLOOR REFLECTED CEILING PLAN**
   a. Added callouts for section 5/A3.4
   b. Reduced number of light fixtures in rooms 121 and 126
   c. Added RS-1 to window in ALEA 110 next to Riser 113
   d. Added control joints in rooms 101, 106, 119, 129, and 130

7. **A3.2 SECOND FLOOR REFLECTED CEILING PLAN**
   a. Added callouts for section 5/A3.4
   b. Added soffit between Stair #1 and Training 206. See clouded area on sheet.
   c. Ceiling type ACT2 changed to ACT3 in 204, 205, 223, 228, 240, 241, and 248
   d. Reduced number of light fixtures in rooms 208, 214A, 214B, and 245
   e. Added control joints to plan. See clouded locations on plan.

8. **A3.3 THIRD FLOOR REFLECTED CEILING PLAN**
   a. Ceiling type ACT2 changed to ACT3 in room 320
   b. Reduced number of light fixtures in rooms 308, 309, 320, 321, and 322
   c. Added control joints to plan. See clouded locations on plan.

9. **A3.4 CEILING DETAILS**
   a. Added detail 5/A3.4 CEILING SECTION – PROJECTOR SCREEN

10. **A4.3 MOCK-UPS**

a. Change sheet name from “EXTERIOR MOCK-UP" to “MOCK-UPS”
b. Removed gypsum board ceilings and associated notes from exterior mock-ups
c. Remove “back-side” axon views from sheet
d. Revised exterior mock-up #1 – added section callouts at exterior windows, rigid insulation, and through-wall flashing peel away section. Refer to clouded revision on sheet.
e. Revised exterior mock-up #2 – removed metal panel color 4 and brick colors 3 & 4, added mortar colors to brick panels, and shortened concrete slab/footing accordingly. Refer to clouded revision on sheet.
f. Added notes for added interior mock-ups: in-place terrazzo flooring, paint colors, and tile/wall/base. Refer to clouded revision on sheet.
g. Added enlarged plan for interior terrazzo floor mock-up. Refer to clouded revision on sheet.

11. A6.4 WALL SECTIONS

a. Refer to sections 1 and 3 for revisions. Shifted embed plate and angle up to align with adjacent condition and provided dimensions for clarification. Revised callout at parapet to refer to new parapet detail – see Sheet A7.4. Refer to clouded revision on sheet.

12. A7.4 SECTION DETAILS

a. Added roof detail 6 for clarification at parapet at projected metal panel. Refer to clouded revision on sheet.

13. A9.5 ENLARGED PLANS AND INTERIOR ELEVATIONS

a. Updated projector screen information
b. Added separate cooktop and wall oven to Staff Lounge 202 to meet ADA requirements

14. A9.9 MILLWORK SECTIONS

a. Added detail 13/A9.9 MILLWORK SECTION – ADA FIXED FRONT PANEL

15. A9.10 INTERIOR SCHEDULED, LEGENDS, AND DETAILS

a. Updated Appliance Legend to show cooktop (CT-1) and wall oven (WO-1)
b. T5 title changed from TRANSITION DETAIL - LVT TO PT to TRANSITION DETAIL - CPT / LVT TO PT
c. Updated wall finish material in Unisex 127 to PWT3
d. Added detail about WD-1 to 1/A9.10

16. A10.1 FIRST FLOOR FINISH PLAN

a. Added transition tags at all flooring transitions
b. Added corner guards to finish plan. Refer to clouded revision on sheet.
c. Added callout at Sheriff 108 for enlarged plan at terrazzo mock-up – see Sheet A4.3.
d. Added divider strip material to TZF1, TZF2, and TZF3

17. A10.2 SECOND FLOOR FINISH PLAN

a. Added transition tags to all flooring transitions
b. Added corner guards to finish plan. Refer to clouded revision on sheet.
c. Added divider strip material to TZF1, TZF2, and TZF3

18. A10.3 THIRD FLOOR FINISH PLAN

a. Added transition tags to all flooring transitions
b. Added corner guards to finish plan. Refer to clouded revision on sheet.
c. Added divider strip material to TZF1, TZF2, and TZF3

<u>STRUCTURAL</u>

19. S2.1 FOUNDATION AND FIRST FLOOR PLAN

a. Sump pump location moved.
b. Note 13 referencing hanging toilet partitions removed.
c. Note 5 added ‘terrazzo’ reference.

20. S2.2 SECOND FLOOR FRAMING PLAN

a. Updated notes on all canopy framing to reflect 8” cold-formed joists instead of 10” joists.
b. Added MC framing to west canopy.
c. Changed HSS sizes at the east and west canopies.
d. Added plan note 20.
e. Changed multiple beam sizes in south building.
f. Updated canopy roof framing for small west canopy and east entry canopy.
g. Moved beams around stair #3.

21. S2.3 THIRD FLOOR FRAMING PLAN

a. Changed multiple beam sizes in south building.
b. Added deck span direction in slab over stair #3.

22. S2.4 ROOF FRAMING PLAN

a. Showed updated location of roof hatch.
b. Change joists to beam on north end.
c. Added top of steel elevations to beams on north end.
d. Changed beam sizes on beams along east end.

23. S3.2 SECTIONS

a. Added channel framing and embed plate above storefront in section 2/S3.2.
b. Changed canopy joist framing size in section 5/S3.2, 6/S3.2, and 10/S3.2.
c. Added note in section 11/S3.2.
d. Added note to galvanize all exposed steel in section 13/S3.2.

24. S3.3 SECTIONS

a. Added note to galvanize all exposed steel in section 7/S3.3, 11/S3.3, 12/S3.3, and 13/S3.3.
b. Changed canopy joist framing size in section 13/S3.3.
c. Updated bar grating note in section 12/S3.3.

25. S3.4 SECTIONS

a. Updated embed plate size in section 12/S3.4.

26. S3.5 SECTIONS

a. Added hooked vertical bars in section 1/S3.5 and 2/S3.5.
b. Changed note and web stiffener locations in section 4/S3.5.
c. Included minimum number of channels in section 5/S3.5.
d. Adjusted top of slab elevation in section 6/S3.5.
e. Moved embed plate and added continuous angle for roof deck support and added headed stud to bent plate in section 7/S3.5.
f. Updated section 8/S3.5.
g. Updated bar grating note in section 11/S3.5.
h. Added headed stud to continuous bent plate and increased embed plate size and added weld information in section 12/S3.5.

27. S3.6 SECTIONS

a. Adjusted stud note in section 2/S3.6.
b. Changed plate and weld information in section 3/S3.6.
c. Updated stiffener spacing in section 4/S3.6.
d. Removed vertical deflection clip and added web stiffener in section 6/S3.6 and 9/S3.6.
e. Updated section 7/S3.6.
f. Changed orientation of continuous angle at top of parapet and added blocking in section 8/S3.6.

MECHANICAL

28. M201A MECHANICAL DUCTWORK FIRST FLOOR PLAN – PART A

a. Added notes to shift linear diffusers in Licensing 129 and Lobby 101 to match Architectural RCPs
b. Added note to revise all 14" deep ducts in Lobby 101 to be 12" deep

29. M201B MECHANICAL DUCTWORK FIRST FLOOR PLAN – PART B

a. Added note to remove fire damper from duct near Vending 133
b. Added note to relocate transfer opening to concrete wall near Reception 119
c. Added note to shift linear diffusers in Reception 119 to match Architectural RCPs
d. Added note to coordinate connection of unit to storm shelter floor above in Warming Kitchen 137

30. M202A MECHANICAL DUCTWORK SECOND FLOOR PLAN – PART A

a. Added note to revise all 14" deep ducts in Staff Lounge 202 to be 12" deep

31. M203A MECHANICAL DUCTWORK THIRD FLOOR PLAN – PART A

a. Added notes to provide fire damper at duct and access panel at chase in Storage 312 and Women 305

ELECTRICAL

32. E3.1 FIRST FLOOR PLAN - POWER

a. Added power to exterior gate electric locks

33. E4.5 SECOND FLOOR PLAN - AUXILIARY

a. Updated card reader for Quiet Room

V. ATTACHMENTS: Small Format / Specifications

1.	00 0000 Table of Contents	06 pages	8.5x11
2.	06 4200 Wood Paneling	03 pages	8.5x11
3.	08 3000 Tornado Resistant Opening Systems	12 pages	8.5x11
4.	08 7100 Architectural Hardware	11 pages	8.5x11
5.	09 6620 Epoxy Terrazzo Flooring	07 pages	8.5x11
6.	10 1400 Signage	04 pages	8.5x11
7.	10 5723 Closet and Utility Shelving	02 pages	8.5x11
8.	Product Cut Sheet – Terra-Sorb	01 pages	8.5x11
9.	Product Cut Sheet – Treegator	01 pages	8.5x11
10.	Approved Substitutions	36 pages	8.5x11

VI. ATTACHMENTS: Drawings dated 03/20/2020 30x42

1. A0.3 DOOR SCHEDULE
2. A0.8 TYPICAL EXTERIOR DETAILS
3. A2.1A FIRST FLOOR DIMENSION PLAN
4. A2.2A SECOND FLOOR DIMENSION PLAN
5. A2.3A THIRD FLOOR DIMENSION PLAN
6. A3.1 FIRST FLOOR REFLECTED CEILING PLAN
7. A3.2 SECOND FLOOR REFLECTED CEILING PLAN
8. A3.3 THIRD FLOOR REFLECTED CEILING PLAN
9. A3.4 CEILING DETAILS
10. A4.3 MOCK-UPS
11. A6.4 WALL SECTIONS
12. A7.4 SECTION DETAILS
13. A9.5 ENLARGED PLANS & INTERIOR ELEVATIONS
14. A9.9 MILLWORK SECTIONS
15. A9.10 INTERIOR SCHEDULES, LEGENDS, AND DETAILS
16. A10.1 FIRST FLOOR FINISH PLAN
17. A10.2 SECOND FLOOR FINISH PLAN

18. A10.3 THIRD FLOOR FINISH PLAN
19. S2.1 FOUNDATION AND FIRST FLOOR PLAN
20. S2.2 SECOND FLOOR FRAMING PLAN
21. S2.3 THIRD FLOOR FRAMING PLAN
22. S2.4 ROOF FRAMING PLAN
23. S3.2 SECTIONS
24. S3.3 SECTIONS
25. S3.4 SECTIONS
26. S3.5 SECTIONS
27. S3.6 SECTIONS
28. M201A MECHANICAL DUCTWORK FIRST FLOOR PLAN – PART A
29. M201B MECHANICAL DUCTWORK FIRST FLOOR PLAN – PART B
30. M202A MECHANICAL DUCTWORK SECOND FLOOR PLAN – PART A
31. M203A MECHANICAL DUCTWORK THIRD FLOOR PLAN – PART A
32. E3.1 FIRST FLOOR PLAN – POWER
33. E4.5 SECOND FLOOR PLAN - AUXILIARY

END OF ADDENDUM #2

SECTION 00 0001

TABLE OF CONTENTS

PROCUREMENT AND CONTRACTING REQUIREMENTS

Division 00 -- Procurement and Contracting Requirements

00 0000 - Cover

00 0000 - Seals Page

00 0110 - Table of Contents

00 0030 - Prequalification and Advertisement for Bids

00 2090 - Alabama Department of Revenue NOTICE Sales Tax Exemption

00 2090.1 - AL Dept. of Revenue Application for Sales and Use Tax Certificate of Exemption

00 2091 - Debarment Suspension and Other Responsibility Matters

00 2093 - Form W-9 Request for Tax ID Number

00 2113 - Instructions to Bidders

00 2114 - Bid Requirements

00 2118 - Bid Proposal Form

00 2118.1 - Bid Form Attachment A: Unit Prices

00 2118.2 - Bid Form Attachment B: Estimate of Sales Tax

00 2119 - AIA Document A310 Bid Bond

00 2120 - AIA Document A101 2017 - Standard Form of Agreement Between Owner and Contractor where the basis of payment is a Stipulated Sum

00 2125 - AIA Document A201 2017 General Conditions of the Contract for Construction

00 2130 - AIA Document A312 2010 Performance Bond

00 2135 - AIA Document A312 2010 Payment Bond

00 6230 - AIA Document G702 1992 Application and Certificate for Payment

00 6240 - AIA Document G703 Continuation Sheet 1992 (Schedule of Values)

00 6280 - AIA Document G701 2017 Change Order

00 6300 - AIA Document G704 Certificate of Substantial Completion 2017

00 6301 - AIA Document G705 List of Subcontractors 2001

00 6305 - AIA Document G706 1994 Contractor's Affidavit of Payment of Debts and Claims

00 6310 - AIA Document G706A 1994 Contractor's Affidavit of Release of Liens

00 6320 - AIA Document G707 1994 Consent of Surety to Final Payment

00 6321 - AIA Document G707A 1994 Consent of Surety to Reduction in/Partial Release of Retainage

00 6500 - AIA Document G709 Work Changes Proposal Request 2001

00 6510 - AIA Document G710 Architect's Supplemental Instructions 2017

00 7100 - AIA Document G714 Construction Change Directive 2017

00 8000 - AIA Document G716 Request for Information (RFI) 2004

00 9000 - Available Project Information

00 9000.1 - Geotechnical Evaluation (TERR 2019)

00 9001 - Alabama Immigration Law Compliance Guidelines Re: Section Nine of Act 2011-535

SPECIFICATIONS

DIVISION 01 GENERAL REQUIREMENTS

01 1000 - Summary

01 2000 - Price and Payment Procedures

01 2100 - Allowances

01 2200 - Unit Prices

01 3010 - Administrative Requirements

01 4000 - Quality Requirements

01 4100 - QA/QC, Structural Tests and Structural Special Inspections

01 4216 - Definitions

01 4310 - Quality Assurance Mock-Up Requirements

01 5000 - Temporary Facilities and Controls

01 6000 - Product Requirements

01 7000 - Execution and Closeout Requirements

01 7419 - Construction Waste Management and Disposal

01 7800 - Closeout Submittals

01 7900 - Demonstration and Training

01 9113 - General Commissioning Requirements

01 9114 - Commissioning Authority Responsibilities

DIVISION 02 EXISTING CONDITIONS

02 4100 - Site Demolition

DIVISION 03 CONCRETE

03 3000 - Cast In Place Concrete

03 3100 - Geo Foam

03 3511 - Concrete Floor Finishes

03 5400 - Self Leveling Cement Based Underlayment

DIVISION 04 MASONRY

04 2000 - Unit Masonry Assemblies

04 7100 - Cast Stone Masonry

DIVISION 05 METALS

05 1200 - Structural Steel Framing

05 2100 - Steel Joist Framing

05 3100 - Steel Decking

05 4000 - Cold Formed Metal Framing

05 4300 - Slotted Channel Framing

05 5000 - Metal Fabrications

05 5100 - Metal Stairs

DIVISION 06 WOOD, PLASTICS, AND COMPOSITES

06 1000 - Rough Carpentry

06 000 - Finish Carpentry

06 4100 - Architectural Wood Casework
06 4200 - Wood Paneling
DIVISION 07 THERMAL AND MOISTURE PROTECTION
07 1113 - Bituminous Dampproofing
07 1300 - Sheet Waterproofing
07 2100 - Thermal Insulation
07 2119 - Foamed In Place Insulation
07 2500 - Weather Barriers
07 4113 - Metal Roof Panel System
07 4264 - Metal Composite Material Wall Panels (ACM)
07 5400 - Thermoplastic Membrane Roofing
07 6200 - Sheet Metal Fabrications, Flashing and Trim
07 7100 - Roof Specialties
07 7200 - Roof Accessories
07 8100 - Applied Fireproofing
07 8400 - Firestopping
07 9100 - Preformed Joint Seals
07 9200 - Joint Sealants
07 9513 - Expansion Joint Cover Assemblies
DIVISION 08 OPENINGS
08 1113 - Hollow Metal Doors and Frames
08 1416 - Flush Wood Doors
08 3000 - Tornado Resistant Opening Systems
08 3100 - Access Doors and Panels
08 3323 - Overhead Coiling Doors
08 4313 - Aluminum Framed Storefronts
08 4413 - Glazed Aluminum Curtain Walls and Window Walls
08 7100 - Architectural Hardware
08 8000 - Glazing
08 8300 - Mirrors
DIVISION 09 FINISHES
09 0561 - Common Work Results for Flooring Preparation
09 0562 - Remedial Floor Coating
09 2116 - Gypsum Board Assemblies
09 3000 - Tiling
09 5100 - Acoustical Ceilings
09 5425 - Linear Suspended Decorative Ceilings
09 6500 - Resilient Flooring
09 6620 - Epoxy Terrazzo Flooring
09 6700 - Fluid-Applied Flooring

09 6813 - Tile Carpeting
09 6900 - Access Flooring
09 9123 - Interior Painting
09 9650 - High Performance Coatings Specialty
DIVISION 10 SPECIALTIES
10 1400 - Signage
10 2113.17 - Solid Phenolic Toilet Compartments
10 2601 - Wall and Corner Protection
10 2800 - Toilet, Bath, and Laundry Accessories
10 4400 - Fire Protection Specialties
10 5100 - Lockers
10 5723 - Closet and Utility Shelving
DIVISION 11 EQUIPMENT
11 5213 - Projection Screens and Projector Lifts
DIVISION 12 FURNISHINGS
12 2300 - Roller Shade Systems
12 3600 - Countertops
DIVISION 13 SPECIAL CONSTRUCTION (Not Used)
DIVISION 14 CONVEYING EQUIPMENT
14 2010 - Passenger Elevators
DIVISION 21 FIRE PROTECTION
21 1313 - Automatic Sprinkler Systems
21 1316 - Pre-Action Sprinkler Systems
21 2200 - Clean-Agent Fire-Extinguishing Systems
DIVISION 22 PLUMBING
22 0100 - Plumbing
22 1113 - Facility Water Distribution Piping
22 1123 - Facility Natural Gas Piping
22 1429 - Sump Pumps
22 3300 - Electric, Domestic-Water Heaters
DIVISION 23 HEATING, VENTILATING, AND AIRCONDITIONING (HVAC)
23 0100 - Mechanical General Provisions
23 0513 - Common Motor Requirements for HVAC Equipment
23 0519 - Meters and Gages for HVAC
23 0522 - Solid State Variable Frequency Speed Controller
23 0523.12 - Ball Valves for HVAC Piping
23 0523.13 - Butterfly Valves for HVAC Piping
23 0523.14 - Check Valves for HVAC Piping
23 0529 - Hangers and Supports for HVAC Piping And Equipment
23 0533 - Heat Tracing For Mechanical Piping

23 0553 - Identification For Piping And Equipment
23 0593 - Testing, Adjusting, And Balancing For HVAC
23 0713 - Duct Insulation
23 0716 - HVAC and Plumbing Equipment Insulation
23 0719 - Mechanical Piping Insulation
23 0800 - Commissioning of HVAC Systems
23 0923 - Direct Digital Control (DDC) System For HVAC
23 0923.11 - Control Valves
23 0923.12 - Control Dampers
23 0923.14 - Flow Instruments
23 0923.16 - Gas Instruments
23 0923.19 - Moisture Instruments
23 0923.23 - Pressure Instruments
23 0923.27 - Temperature Instruments
23 2113 - Hydronic Piping
23 2113.13 - Underground Hydronic Piping
23 2116 - Hydronic Piping Specialties
23 2123 - Hydronic Pumps
23 2300 - Refrigerant Piping
23 2513 - Water Treatment For Closed-Loop Hydronic Systems
23 3113 - Metal Ducts
23 3300 - Air Duct Accessories
23 3346 - Flexible Ducts
23 3423 - HVAC Power Ventilators
23 3600 - Air Terminal Units
23 3713 - Diffusers, Registers, And Grilles
23 4100 - Particulate Air Filtration
23 5123 - Gas Vents
23 5216 - Condensing Boilers
23 6423 - Air Cooled Water Chillers
23 7343 - Air-Handling Units
23 8123.12 - Computer-Room Air-Conditioners
23 8126 - Split-System Air-Conditioners
23 8129 - Variable Refrigerant-Flow HVAC Systems
23 8239 - Wall and Ceiling Unit Heaters
DIVISION 26 ELECTRICAL
26 0100 - Electrical General
26 0740 - Voice & Data Communications Cabling
26 3213 - Engine Generators
26 3215 - Generator Docking Station

26 3353 - Static Uninterruptible Power Supply
26 3600 - Transfer Switches
26 4113 - Lightning Protection
DIVISION 27 COMMUNICATIONS
27 0000 - Communications Systems Requirements
DIVISION 28 SAFETY AND SECURITY
28 1000 - Access Control
28 2001- IP Cameras
28 2002 - Network Video Recorder
DIVISION 31 EARTHWORK
31 0000 - Earth Moving
31 6613 - Aggregate Piers
DIVISION 32 EXTERIOR IMPROVEMENTS
32 1216 - Asphalt Paving
32 1313 - Concrete Paving
32 1373 - Concrete Paving Joint Sealants
32 1723 - Pavement Markings
DIVISION 33 UTILITIES
33 4200 - Storm Water Conveyance

END TABLE OF CONTENTS.

SECTION 06 4200
WOOD PANELING
PART 1 GENERAL
1.01 SECTION INCLUDES
A. Custom wood veneer paneling.
B. Solid wood panel trim.
C. Shop finishing.

1.02 RELATED REQUIREMENTS
A. Section 06100 - Rough Carpentry
B. Section 06200 - Finish Carpentry
C. Section 06410 - Custom Cabinets

1.03 REFERENCE STANDARDS
A. ANSI A208.1 - American National Standard for Particleboard; 2009.
B. ASTM E84 - Standard Test Method for Surface Burning Characteristics of Building Materials; 2015a.
C. AWI (QCP) - Quality Certification Program; current edition at www.awiqcp.org.
D. AWI/AWMAC/WI (AWS) - Architectural Woodwork Standards; 2014.
E. AWMAC/WI (NAAWS) - North American Architectural Woodwork Standards, U.S. Version 3.0; 2016.
F. HPVA HP-1 - American National Standard for Hardwood and Decorative Plywood; 2009.

1.04 SUBMITTALS
A. See Section 01 3000 - Administrative Requirements, for submittal procedures.
B. Shop Drawings: Indicate materials, component profiles, fastening methods, jointing details, and accessories.
   1. Scale of Drawings: 1-1/2 inch to 1 foot, minimum.
   2. Provide plan of paneling component sequencing.
   3. Provide information as required by AWI/AWMAC/WI (AWS) or AWMAC/WI (NAAWS).
   4. Include certification program label.
C. Samples: Submit two samples of finished plywood, 12 x 12 inch in size, illustrating wood grain and specified finish.
D. Samples: Submit two samples of wood trim, 12 inch long.
E. Certificate: Submit labels and certificates required by quality assurance and quality control programs.

1.05 QUALITY ASSURANCE
A. Fabricators:
   1. Luttrell Architectural Woodwork.
   2. Southern Woodsmith.
B. Fabricator Qualifications: Company specializing in fabricating the products specified in this section with minimum 10 years of documented experience.
   1. Accredited participant in the specified certification program prior to the commencement of fabrication and throughout the duration of the project.
   2. Single Source Responsibility: Provide and install this work from single fabricator.
C. Quality Certification:
   1. Comply with AWI (QCP) woodwork association quality certification service/program in accordance with requirements for work specified in this section: www.awiqcp.org/#sle.
   2. Provide labels or certificates indicating that the installed work complies with AWI/AWMAC/WI (AWS) requirements for grade or grades specified.
   3. Provide designated labels on shop drawings as required by certification program.
   4. Provide designated labels on installed products as required by certification program.

5. Submit certifications upon completion of installation that verifies this work is in compliance with specified requirements.

1.06 REGULATORY REQUIREMENTS

A. Conform to 2015 International Building code for fire retardant requirements.

1.07 DELIVERY, STORAGE, AND HANDLING

A. Protect work from moisture damage.

B. Do not deliver wood materials to project site until building is fully enclosed and interior temperature and humidity are in accordance with recommendations of AWI/AWMAC/WI (AWS) or AWMAC/WI (NAAWS).

PART 2 PRODUCTS

2.01 PANELING

A. Quality Standard: Custom Grade, in accordance with AWI/AWMAC/WI (AWS) or AWMAC/WI (NAAWS), unless otherwise indicated.

B. Full Width Veneer Board Paneling:
   1. Species: White Oak.
   2. Panel Veneer Cut : Rift Sawn over MDF core plywood.
   3. Material Thickness: 3/4 inch.
   4. Visible Edges and Shadowline Reveals: As indicated on drawings.
   5. Outside Corners: As indicated on drawings.
   6. Finish: Transparent, shop finished.

2.02 WOOD-BASED MATERIALS - GENERAL

A. Wood fabricated from old growth timber is not permitted.

B. Wood fabricated from timber recovered from riverbeds or otherwise abandoned is permitted, unless indicated otherwise, and provided it is clean and free of contamination, identify source; provide lumber re-graded by an inspection service accredited by the American Lumber Standard Committee, Inc. (ALSC).

C. Hardwood Plywood: Face species White Oak, rift cut, medium density fiberboard core; HPVA HP-1, Front Face Grade AA, Back Face Grade 1, glue type as recommended for application.

2.03 ADHESIVES AND FASTENERS

A. Adhesives: Type suitable for intended purpose, complying with applicable air quality regulations.

B. Fasteners: Of size and type to suit application; stainless steel finish in concealed locations and not permitted in exposed locations.

2.04 WOOD TREATMENT PROCESSES

2.05 FABRICATION

A. Shop prepare and identify panels for grain matching during site erection.

B. Prepare panels for delivery to site, permitting passage through building openings.

C. Finish exposed edges of paneling boards to match faces and as specified by grade requirements.

D. When necessary to cut and fit on site, provide materials with ample allowance for cutting and scribing.

2.06 SHOP FINISHING

A. Apply wood filler in exposed fastening indentations.

B. On items to receive transparent finishes, use wood filler that matches surrounding surfaces and is of type recommended for the applicable finish.

C. Finish work in accordance with AWI/AWMAC/WI (AWS) or AWMAC/WI (NAAWS), Section 5 - Finishing for grade specified and as follows:
   1. Transparent:
      a. System - 5, Varnish, Conversion.

b. Stain: As selected by Architect.
c. Sheen: Satin, or as selected.
d. Products:
1) Sherwin-Williams Sher-Wood F3 Kemvar Conversion Varnish, AWI Finishing System 5.
2) Substitutions: Section 01 6000 - Product Requirements.

D. Back prime woodwork items prior to installation.

2.07 ACCESSORIES

A. Lumber for Shimming, Blocking: Softwood lumber of SPF species.

B. Primer: Alkyd primer sealer type.

C. Wood Filler: Tinted to match surface finish color.

PART 3 EXECUTION

3.01 EXAMINATION

A. Verify that field measurements are as indicated on shop drawings.

B. Verify adequacy of backing and support framing.

C. Verify mechanical, electrical, and building items affecting work of this section are placed and ready to receive this work.

3.02 INSTALLATION

A. Install work in accordance with AWI/AWMAC/WI (AWS) or AWMAC/WI (NAAWS) requirements for grade indicated.

B. Do not begin installation until wood materials have been fully acclimated to interior conditions.

C. Coordinate the installation of concealed hanging / fastening system behind paneling.

D. Set and secure materials and components in place, plumb and level, using concealed fastening .

E. Where necessary to cut and fit on site, scribe work abutting other components. Do not use additional overlay trim to conceal gaps.

F. Coordinate the installation of firestopping behind paneling.

G. Set exposed fasteners, fill with wood filler, and finish to match panel finish.

H. Touch up damaged finish to match original, using materials provided by fabricator; replace components that cannot be refinished like new.

3.03 TOLERANCES

A. Maximum Variation from True Position: 1/16 inch.

B. Maximum Offset from True Alignment with Abutting Materials: 1/32 inch.

END OF SECTION

SECTION 08 3000
TORNADO RESISTANT OPENING SYSTEMS

PART 1 - GENERAL

1.1 WORK INCLUDED:

A. Provide Tornado Resistant Opening Systems, to include doors, frames and hardware as a complete assembly and all related work.

1.2 RELATED WORK:

A. Drawings and General Provisions of the Contract, including General and Supplementary Conditions and Division 1 Specification Sections, apply to this section.

B. Related work specified elsewhere includes:

.. Section 08 1100 - "Steel Doors and Frames"
.. Section 08 7100 - "Finish Hardware"
.. Section 09 9000 - "Painting"

1.3 REFERENCES:

A. NFPA 80 - Standard for Fire Doors and Other Opening Protectives – 2010

B. ANSI/DHI A 115.IG - Installation Guide for Doors and Hardware.

C. ANSI/BHMA A 156 - Specifications for Hardware Preparations in Standard Steel Doors and Frames.

D. ANSI A 250.4 - Test Procedure and Acceptance Criteria for Physical Endurance for Steel Doors and Hardware Reinforcing.

E. ANSI/SDI A 250.8 - SDI-100 Recommended Specifications for Standard Steel Doors and Frames - 2008.

F. ANSI A 250.10 - Test Procedure and Acceptance Criteria for Prime Painted Steel Surfaces for Steel Doors and Frames.

G. ANSI A 250.11 - Recommended Erection Instructions for Steel Frames.

H. ASTM A 653/A 653M - Standard Specification for Steel Sheet, Zinc-Coated (Galvanized) or Zinc-Iron Alloy-Coated (Galvannealed) by the Hot-Dip Process.

I. ASTM A 924 - Specification for General Requirements for Steel Sheet, Metallic Coated by the Hot Dip Process.

J. SDI-111 - Recommended Standard Details for Steel Doors & Frames.

K. NAAMM/HMMA-840 - Guide Specification for Installation and Storage of Hollow Metal Doors and Frames.

L. ANSI/UL 10C - Standard for Safety for Positive Pressure Fire Tests of Door Assemblies.

M. NFPA 252 - Standard Method of Fire Tests of Door Assemblies.

N. Federal Emergency Management Agency (FEMA) 361 - Design and Construction Guidance for Community Safe Rooms.

O. ANSI/ICC 500-2014 – ICC/NSSA Standard for Design and Construction of Storm Shelters

P. Accessibility:
1. Americans With Disabilities Act of 2010 (ADA) "Accessibility Guidelines" (ADA-AG).
2. "2010 ADA Standards for Accessible Design", Published in the Federal Register September 15, 2010.
3. American National Standards Institute (ANSI), ANSI A 117.1, 2009.

Q. Alabama Building Commission

1.4 CODES:

A. NFPA 101 – Life Safety Code 2009

B. IBC 2015 - International Building Code

C. ANSI 117.1 – Accessible and Usable Building and Facilities

1.5 SUBMITTALS:

A. General: Submit the following in accordance with Conditions of Contract and Division 1 Specification Sections.

B. Product Data: Manufacturer's standard details and catalog data indicating compliance with referenced standards, and manufacturer's installation instructions.

C. Certificates:
1. Manufacturer's certification that products comply with referenced standards.
2. Evidence of manufacturer's membership in the Steel Door Institute.

D. Shop Drawings: Door, frame, and hardware schedule in accordance with SDI 111D. Show types, quantities, dimensions, specified performance, and design criteria, materials and similar data for each opening required.
1. Indicate frame configuration, anchor types and spacing, location of cutouts for hardware, reinforcement, to ensure doors and frames are properly prepared and coordinated to receive hardware.
2. Indicate door elevations, internal reinforcement and closure method.

E. The Tornado Resistant Opening Systems supplier shall, after award of a formal contract submit to the architect, six (6) complete computerized or typewritten (handwritten are not acceptable) copies of the proposed Tornado Door, Frame, and Hardware Schedule for approval. After approval of the schedule the supplier shall provide three (3) copies of this approved schedule to the contractor for file and distribution purposes.

F. When submitting Tornado Door, Frame, and Hardware schedules for approval, include two manufacturers' cut sheets on each hardware and door/frame item proposed. Index it with the use of number or letters or a combination of both, with the hardware schedule. The index numbers/letters are to be in right hand column on the same line as the respective manufacturers' numbers. All manufacturers' numbers shall be indexed even when appearing more than once.

1.6 QUALITY ASSURANCE:

A. Supplier: A direct account of the manufacturer who has on permanent staff, an Architectural Hardware Consultant (AHC), a Certified Door Consultant (CDC) or an Architectural Openings Consultant (AOC), who will be available to consult with the Architect and Contractor regarding matters affecting the door and frame openings.

B. Tornado Resistant Openings Systems: Design Door and Frame Systems for compliance with Federal Emergency Management Agency (FEMA) community shelters and ANSI / ICC 500-2014 - Standard for the Design and Construction of Storm Shelters.
   1. Label tornado resistant doors and frames with permanently affixed metal labels (non-Mylar) to clearly denote compliance with FEMA 361 and ICC500-2014.

C. Fire Rated Doors and Frames: Underwriters' Laboratories and Warnock Hersey, labeled fire doors and frames:
   1. Label fire doors and frames in accordance with Underwriters Laboratories standard UL10C, and Positive Pressure Fire Tests of Door Assemblies.
   2. Construct and install doors and frames to comply with current issue of NFPA 80.
   3. Manufacture Underwriters' Laboratories labeled doors and frames under the UL factory inspection program and in strict compliance to UL procedures, and provide the degree of fire protection, heat transmission and panic loading capability indicated by the opening class.
   4. Affix a physical label or approved marking to each fire door or fire door frame, at an authorized facility as evidence of compliance with procedures of the labeling agency. Label embossment is not permitted.
   5. Conform to applicable codes for fire ratings. It is the intent of this specification that hardware and its application comply or exceed the standards for labeled openings. In case of conflict between types required for fire protection, furnish type required by NFPA and UL.
   6. Fire door assemblies in exit enclosures and exit passageways; maximum transmitted temperature end point rating of not more than 250 degrees F (121 degrees C) above ambient at the end of 30 minutes of the standard fire test exposure.

D. Manufacturer Qualifications: Member of the Steel Door Institute; Minimum five years documented experience manufacturing products specified this Section.

E. Installer: Minimum five years documented experience installing products specified this Section.

F. Refer to Division 1 Section "Special Conditions" for additional information and minimum experience requirements.

G. Substitutions: Request for substitutions of items of Tornado Resistant Openings Systems (doors, frames and hardware) other than those listed as "acceptable and approved" shall be made to the architect in writing no later than 10 days prior to bid opening. Approval of substitutions will only be given in writing or by Addenda. Requests for substitutions shall be accompanied by samples and/or detailed information for each manufacturer

of each product showing design, functions, material thickness and any other pertinent information needed to compare product with that specified. Lack of this information will result in a refusal. Refer to Section 01015 for additional information regarding substitutions and submittals.

1.7 DELIVERY, STORAGE, AND HANDLING:

A. Comply with manufacturer's current written instructions and recommendations.

B. Handle, store and protect products in accordance with the manufacturers printed instructions and ANSI/SDI A250.10 and NAAMM/HMMA 840.

C. Store doors vertically in a dry area, under a proper vented cover. Place on 4 inch (102 mm) high wood sills to prevent rust or damage. Provide 1/4-inch (6 mm) space between doors to promote air circulation.

D. Store frames in an upright position with heads uppermost under cover. Place on 4 inch (102 mm) high wood sills to prevent rust and damage. Store assembled frames five units maximum in a stack with 2 inch (51 mm) space between frames to promote air circulation.

E. Do not use non-vented plastic or canvas shelters to prevent rust or damage.

F. Should wrappers become wet, remove immediately.

G. Refer to Division 1 Sections "Summary of Work" and "Special Conditions" for additional information and requirements regarding stored materials.

1.8 COORDINATION:

A. Coordinate Work with Section 08110 Steel Doors and Frames, Section 08710 Door Hardware, and other directly affected sections involving manufacture or fabrication of internal cutouts and reinforcement for door hardware, electric devices and recessed items.

B. Coordinate Work with frame opening construction, door and hardware installation.

C. Sequence installation to accommodate required door hardware.

D. Verify field dimensions for factory assembled frames prior to fabrication.

PART 2 - PRODUCTS

2.1 ACCEPTABLE MANUFACTURERS:

A. Acceptable Manufacturer: Steelcraft – Paladin PW Series, Allegion, Cincinnati, OH; or preapproved equivalent.
   1. Product manufactured by Curries – ASSA ABLOY are pre-approved contingent upon meeting or exceeding the requirements of this specification section.

B. Substitutions allowed only as described under 1.06 F of Section 1.

C. Provide all steel doors and frames from a single manufacturer.

2.2 TORNADO RESISTANT OPENING SYSTEMS:

A. General: Tornado Door and Frame Systems must be specifically designed, tested and approved, in compliance with the ICC 500-2014 – Standard for the Design and Construction of Storm Shelters. For compliance with the standards, the Steel Door, Steel Frame and Hardware must be supplied as a system.

B. Steel Doors: Paladin PW14 Series Flush Door.
1. Face sheets: 14 gage (1.7 mm) galvannealed steel having an A60 zinc-iron alloy coating conforming to ÅSTM designations A653 and A924.
2. Hinge and lock edges: 14 gage (1.7 mm) galvannealed steel having an A60 zinc-iron alloy coating conforming to ÅSTM designations A653 and A924.
3. Continuous vertical mechanical joints with edge seams welded, filled and ground smooth.
4. Bevel edges 1/8 inch (3 mm) in 2 inches (50 mm). Square edges are not acceptable.
5. Hinge reinforcements: Minimum 7 gage (4.4 mm) galvannealed steel, projection welded to the edge of the door.
6. Top and bottom steel reinforcement channels, galvannealed 14 gage (1.7 mm), projection welded to both face sheets on 4 inches (102 mm) centers.
7. Reinforce door faces with 18 gage (1.0 mm) vertical stiffeners manufactured from galvannealed steel conforming to ASTM A 653 and ASTM A 924 and welded to each face sheet.
8. Reinforced lock stiles with full-height 12 gage (2.5 mm) lock reinforcing channels.
9. Fire Rating: Supply door units bearing Labels for fire ratings indicated in Door Schedule for the locations indicated.

C. Steel Frames: Paladin FP14 Series Frame.
1. 14 Gauge A60 galvannealed steel
2. Die miter corner connections @ head & jamb to ensure tight & closed miters.
3. Hinge reinforcements: Minimum 7 (4.4 mm) gauge galvannealed steel
4. Adjustable base anchors to allow installation adjustment when floor is unlevel.
5. Fire Rating: Supply door units bearing Labels for fire ratings indicated in Door Schedule for the locations indicated.

2.3 ACCESSORIES:

A. Anchors: Manufacturer's masonry type anchors, specified in manufacturer's printed Installation instructions for project conditions.

2.4 FINISHES:

A. Chemical Treatment: Treat steel surfaces to promote paint adhesion.

B. Factory Prime Finish: Meet requirements of ANSI A 250.10.

PART 3 - EXECUTION

3.1 EXAMINATION:

A. Verify that project conditions are acceptable before beginning installation of frames.

B. Do not begin installation until conditions have been properly prepared.

C. Correct unacceptable conditions before proceeding with installation.

3.2 INSTALLATION:

A. Install doors and frames in accordance with manufacturer's printed installation instructions and with Steel Door Institute's recommended erection instructions for steel frames ANSI A250.11 and NAAMM/HMMA 840.

B. Fire Doors and Frames: Install in accordance with NFPA 80.

C. Remove temporary steel spreaders prior to installation of frames.

D. Set frames accurately in position; plumb, align and brace until permanent anchors are set. After wall construction is complete, remove temporary wood spreaders.
   1. Field splice only at approved locations indicated on the shop drawings.
   2. Weld, grind, and finish as required to conceal evidence of splicing on exposed faces.

E. Provide full height 3/8 inch (9.5 mm) to 1-1/2 inch (38 mm) thick strip of polystyrene foam blocking at frames requiring grouting where continuous hinges are specified. Apply the strip to the back of the frame, where the hinge is to be installed, to facilitate field drilling or tapping.

F. FEMA 361 doors shall be factory prepared and reinforced for hardware. Doors shall have internal concealed rods and associated latches installed at the factory by the door manufacturer prior to shipment to the job site. Installation shall be based upon FEMA lock manufacturer’s template and install instructions. Field install or supplier shop install of FEMA concealed internal rods and rod latches will not be accepted.

G. Apply hardware in accordance with hardware manufacturers' instructions and Section 08710 of these Specifications. Install hardware with only factory-provided fasteners. Install silencers. Adjust door installation to provide uniform clearance at head and jambs, to achieve maximum operational effectiveness and appearance.

3.3 ADJUST AND CLEAN:

A. Adjust doors for proper operation, free from binding or other defects.

B. Clean and restore soiled surfaces. Remove scraps and debris and leave site in a clean condition.

C. Prime Coat Touch-Up: Immediately after erection, sand smooth rusted or damaged areas of prime coat, and apply touch-up of compatible air-drying primer.

3.4 PROTECTION:

A. Advise General Contractor on measures necessary to protect installed products and finished surfaces from damage during construction.

PART 4 HARDWARE SCHEDULE:

A. Hardware for FEMA 361/ICC500 doors shall be as scheduled below. Hardware manufacturers, designs and finishes shall be same as specified for Section 08710 - Door Hardware.

HARDWARE SET: WS-101

SINGLE 4'-0" X 8'-0" X 1 ¾" TORNADO RESISTANT STEEL DOORS AND FRAMES, WITH THE FOLLOWING HIGH IMPACT RATED DOOR HARDWARE

DOOR NUMBER:
115

EACH TO HAVE:

1	CONT. HINGE	700 EPT	IVE
1	POWER TRANSFER	EPT10	VON
1	ELEC FIRE EXIT HARDWARE	RX-LC-QEL-WS-9857-L-F-18	VON
1	RIM CYLINDER	AS REQUIRED	
1	PERMANENT IC CORE	AS REQUIRED	
1	SURFACE CLOSER	4040XP SCUSH	LCN
1	KICK PLATE	8400 8" X 2" LDW B-CS	IVE
1	RAIN DRIP	142	ZER
1	GASKETING	8144	ZER
1	DOOR SWEEP	8198	ZER
1	THRESHOLD	65	ZER
1	CREDENTIAL READER	BY SECURITY/ACCESS CTRL SYSTEMS	
1	DOOR CONTACT	BY SECURITY/ACCESS CTRL SYSTEMS	
1	POWER SUPPLY	PS902 4RL-FA	VON

DOORS, FRAMES, AND HARDWARE MUST BE SUPPLIED AS A COMPLETE SYSTEM, AS TESTED AND APPROVED, FOR COMPLIANCE WITH ICC 500-2014 STANDARDS.
COORDINATE HARDWARE WITH FIRE, ELECTRICAL, SECURITY AND ACCESS CONTROL SYSTEMS.
BALANCE OF EAC COMPONENTS BY FIRE, ELECTRICAL, SECURITY AND ACCESS CONTROL SYSTEMS.

HARDWARE SET: WS-102

SINGLE 3'-0" X 8'-0" X 1 ¾" TORNADO RESISTANT STEEL DOORS AND FRAMES, WITH THE FOLLOWING HIGH IMPACT RATED DOOR HARDWARE

DOOR NUMBER:
S2-1B S3-1

EACH TO HAVE:

1	CONT. HINGE	700 EPT	IVE
1	POWER TRANSFER	EPT10	VON
1	ELEC FIRE EXIT HARDWARE	RX-LC-QEL-WS-9857-L-F-18	VON
1	RIM CYLINDER	AS REQUIRED	
1	PERMANENT IC CORE	AS REQUIRED	
1	SURFACE CLOSER	4040XP SCUSH	LCN
1	KICK PLATE	8400 8" X 2" LDW B-CS	IVE
1	RAIN DRIP	142	ZER
1	GASKETING	8144	ZER
1	DOOR SWEEP	8198	ZER
1	THRESHOLD	65	ZER
1	CREDENTIAL READER	BY SECURITY/ACCESS CTRL SYSTEMS	
1	DOOR CONTACT	BY SECURITY/ACCESS CTRL SYSTEMS	
1	POWER SUPPLY	PS902 4RL-FA	VON

DOORS, FRAMES, AND HARDWARE MUST BE SUPPLIED AS A COMPLETE SYSTEM, AS TESTED AND APPROVED, FOR COMPLIANCE WITH ICC 500-2014 STANDARDS.
COORDINATE HARDWARE WITH FIRE, ELECTRICAL, SECURITY AND ACCESS CONTROL SYSTEMS.
BALANCE OF EAC COMPONENTS BY FIRE, ELECTRICAL, SECURITY AND ACCESS CONTROL SYSTEMS.

HARDWARE SET: WS-103

SINGLE 4'-0" X 8'-0" X 1 ¾" TORNADO RESISTANT STEEL DOORS AND FRAMES, WITH THE FOLLOWING HIGH IMPACT RATED DOOR HARDWARE

DOOR NUMBER:
001

EACH TO HAVE:

1	CONT. HINGE	700	IVE
1	FIRE EXIT HARDWARE	WS-9857-L-F-18	VON
1	RIM CYLINDER	AS REQUIRED	
1	PERMANENT IC CORE	AS REQUIRED	
1	SURFACE CLOSER	4040XP SCUSH	LCN
1	KICK PLATE	8400 8" X 2" LDW B-CS	IVE
1	RAIN DRIP	142	ZER
1	GASKETING	8144	ZER
1	DOOR SWEEP	8198	ZER
1	THRESHOLD	65	ZER

DOORS, FRAMES, AND HARDWARE MUST BE SUPPLIED AS A COMPLETE SYSTEM, AS TESTED AND APPROVED, FOR COMPLIANCE WITH ICC 500-2014 STANDARDS.

HARDWARE SET: WS-104

SINGLE 3'-0" X 8'-0" X 1 ¾" TORNADO RESISTANT STEEL DOORS AND FRAMES, WITH THE FOLLOWING HIGH IMPACT RATED DOOR HARDWARE

DOOR NUMBER:
239

EACH TO HAVE:

1	CONT. HINGE	600 EPT	IVE
1	POWER TRANSFER	EPT10	VON
1	ELEC FIRE EXIT HARDWARE	RX-LC-QEL-WS-9857-L-F-18	VON
1	RIM CYLINDER	AS REQUIRED	
1	PERMANENT IC CORE	AS REQUIRED	
1	SURFACE CLOSER	4040XP SCUSH MC	LCN
1	KICK PLATE	8400 8" X 2" LDW B-CS	IVE
1	CREDENTIAL READER	BY SECURITY/ACCESS CTRL SYSTEMS	
1	DOOR CONTACT	BY SECURITY/ACCESS CTRL SYSTEMS	
1	POWER SUPPLY	PS902 4RL-FA	VON

DOORS, FRAMES, AND HARDWARE MUST BE SUPPLIED AS A COMPLETE SYSTEM, AS TESTED AND APPROVED, FOR COMPLIANCE WITH ICC 500-2014 STANDARDS.
COORDINATE HARDWARE WITH FIRE, ELECTRICAL, SECURITY AND ACCESS CONTROL SYSTEMS.
BALANCE OF EAC COMPONENTS BY FIRE, ELECTRICAL, SECURITY AND ACCESS CONTROL SYSTEMS.

HARDWARE SET: WS-105

SINGLE 3'-0" X 8'-0" X 1 ¾" TORNADO RESISTANT STEEL DOORS AND FRAMES, WITH THE FOLLOWING HIGH IMPACT RATED DOOR HARDWARE

DOOR NUMBER:
228

EACH TO HAVE:

1	CONT. HINGE	600	IVE
1	POWER TRANSFER	EPT10	VON
1	FIRE EXIT HARDWARE	WS-9857-L-F-18	VON
1	RIM CYLINDER	AS REQUIRED	
1	PERMANENT IC CORE	AS REQUIRED	
1	SURFACE CLOSER	4040XP EDA	LCN
1	KICK PLATE	8400 8" X 2" LDW B-CS	IVE
1	CREDENTIAL READER	BY SECURITY/ACCESS CTRL SYSTEMS	
1	DOOR CONTACT	BY SECURITY/ACCESS CTRL SYSTEMS	
1	FIRE/LIFE WALL MAG	SEM7850	LCN
1	GASKETING	488	ZER

DOORS, FRAMES, AND HARDWARE MUST BE SUPPLIED AS A COMPLETE SYSTEM, AS TESTED AND APPROVED, FOR COMPLIANCE WITH ICC 500-2014 STANDARDS.
COORDINATE HARDWARE WITH FIRE AND ELECTRICAL SYSTEMS.

HARDWARE SET: WS-106

SINGLE 3'-0" X 8'-0" X 1 ¾" TORNADO RESISTANT STEEL DOORS AND FRAMES, WITH THE FOLLOWING HIGH IMPACT RATED DOOR HARDWARE

DOOR NUMBER:
S2-3

EACH TO HAVE:

1	CONT. HINGE	600	IVE
1	FIRE EXIT HARDWARE	WS-9857-L-F-18	VON
1	RIM CYLINDER	AS REQUIRED	
1	PERMANENT IC CORE	AS REQUIRED	
1	SURFACE CLOSER	4040XP RW/PA	LCN
1	WALL STOP	WS401/402CVX	IVE
1	KICK PLATE	8400 8" X 2" LDW B-CS	IVE
1	GASKETING	488	ZER

DOORS, FRAMES, AND HARDWARE MUST BE SUPPLIED AS A COMPLETE SYSTEM, AS TESTED AND APPROVED, FOR COMPLIANCE WITH ICC 500-2014 STANDARDS.

HARDWARE SET: WS-107

SINGLE 3'-0" X 8'-0" X 1 ¾" TORNADO RESISTANT STEEL DOORS AND FRAMES, WITH THE FOLLOWING HIGH IMPACT RATED DOOR HARDWARE

DOOR NUMBER:
S2-2A

EACH TO HAVE:

1	CONT. HINGE	600 EPT	IVE
1	POWER TRANSFER	EPT10	VON
1	ELEC FIRE EXIT HARDWARE	RX-LC-QEL-WS-9857-L-F-18	VON
1	RIM CYLINDER	AS REQUIRED	
1	PERMANENT IC CORE	AS REQUIRED	
1	SURFACE CLOSER	4040XP RW/PA	LCN
1	KICK PLATE	8400 8" X 2" LDW B-CS	IVE
1	OH STOP	90S	GLY
1	CREDENTIAL READER	BY SECURITY/ACCESS CTRL SYSTEMS	
1	DOOR CONTACT	BY SECURITY/ACCESS CTRL SYSTEMS	
1	POWER SUPPLY	PS902 4RL-FA	VON

DOORS, FRAMES, AND HARDWARE MUST BE SUPPLIED AS A COMPLETE SYSTEM, AS TESTED AND APPROVED, FOR COMPLIANCE WITH ICC 500-2014 STANDARDS.
COORDINATE HARDWARE WITH FIRE, ELECTRICAL, SECURITY AND ACCESS CONTROL SYSTEMS.
BALANCE OF EAC COMPONENTS BY FIRE, ELECTRICAL, SECURITY AND ACCESS CONTROL SYSTEMS.

HARDWARE SET: WS-108

SINGLE 3'-0" X 8'-0" X 1 ¾" TORNADO RESISTANT STEEL DOORS AND FRAMES, WITH THE FOLLOWING HIGH IMPACT RATED DOOR HARDWARE

DOOR NUMBER:
210

EACH TO HAVE:

1	CONT. HINGE	600	IVE
1	POWER TRANSFER	EPT10	VON
1	MULT PT OFFICE/ENTRY	LM9350 18A L583-363	SCH
1	CYL/CORE	AS REQUIRED	
1	SURFACE CLOSER	4040XP SCUSH MC	LCN
1	KICK PLATE	8400 8" X 2" LDW B-CS	IVE
1	CREDENTIAL READER	BY SECURITY/ACCESS CTRL SYSTEMS	
1	DOOR CONTACT	BY SECURITY/ACCESS CTRL SYSTEMS	
1	GASKETING	488	ZER

DOORS, FRAMES, AND HARDWARE MUST BE SUPPLIED AS A COMPLETE SYSTEM, AS TESTED AND APPROVED, FOR COMPLIANCE WITH ICC 500-2014 STANDARDS.

HARDWARE SET: WS-109

SINGLE 6'-0" X 7'-0" X 1 ¾" TORNADO RESISTANT STEEL DOORS AND FRAMES, WITH THE FOLLOWING HIGH IMPACT RATED DOOR HARDWARE

DOOR NUMBER:
114A

EACH TO HAVE:

1	CONT. HINGE	600	IVE
1	MULT PT OFFICE/ENTRY	LM9350 18A L583-363	SCH
1	CYL/CORE	AS REQUIRED	
1	OH STOP	90S	GLY
1	SURFACE CLOSER	4040XP RW/PA	LCN
1	KICK PLATE	8400 8" X 2" LDW B-CS	IVE
1	GASKETING	488	ZER

DOORS, FRAMES, AND HARDWARE MUST BE SUPPLIED AS A COMPLETE SYSTEM, AS TESTED AND APPROVED, FOR COMPLIANCE WITH ICC 500-2014 STANDARDS.

HARDWARE SET: WS-110

DOOR NUMBER:
230A 232A 233A 235A 237A 237B
238B

ALL HARDWARE BY STEEL MOTORIZED STORM SHUTTER DOOR MANUFACTURER/SUPPLIER.

END OF SECTION

SECTION 08710

FINISH HARDWARE

PART 1 – GENERAL

1.1 DESCRIPTION OF WORK/SUMMARY:

A. Section includes finish hardware for door.

B. Related Sections

1. Section 08110 "Steel Doors and Frames" for hollow metal doors.
2. Section 08211 "Flush Wood Doors" for wood doors.
3. Section 08410 "Aluminum Entrances and Storefronts" for aluminum doors
4. Division 16 – Electrical

1.2 REFERENCES

1. IBC – 2018

1.3 SUBMITTALS

A. General Requirements. Prepare submittals in accordance with Section 01300.

B. Schedule. Hardware schedule to be prepared in vertical format and listed in order described in "Sequence and Format for the Hardware Schedule" / DHI 1996.

C. Template information for hardware items form approved hardware schedule will be distributed to related sections.

D. Keying Schedule. Schedule to be prepared in conformance with "Keying Systems and Nomenclature" / DHI.

E. Operations and Maintenance: At completion of project, owner to receive the following:

1. 3 each tools for adjustment of doors closers and exit devices.
2. 2 copies of approved finish hardware schedule which also reflects keying schedule.
3. 2 copies of installation instruction for closers, locksets and exit devices.

1.4 QUALITY ASSURANCE

A. Substitutions. Substitutions to be considered in accordance with section 01600.

B. Supplier Qualifications. Hardware supplier must employ an architectural hardware consultant (AHC) as recognized by the Door and Hardware Institute (DHI). An AHC from supplier must be available for a monthly meeting at jobsite.

1.5 DELIVERY STORAGE AND HANDLING

A. Hardware should be marked by hardware set and door number prior to delivery.

B. Delivery: Hardware to be delivered by supplier – no direct shipments are permitted.

C. Storage: Provide a secure storage that includes shelving adequate for hardware.

1.6 WARRANTY

A. Provide ten year warranty on closer bodies from date of occupancy. All other warranties on hardware are included in "Warranties and Bonds" in Division 1.

1.7 MAINTENANCE

A. Extra Materials: Provide 1 lockset of each function (L9010, L9050, L9070, L9080) with appropriate trim. (4 required)

PART 2 – PRODUCTS

2.1 ACCEPTABLE MANUFACTURERS

Pemko	Memphis, TN	(800) 824-3018
HES	Pheonix, AZ	(800) 626-7590
LCN Closers	Princeton, Il	(877) 526-4653
National Guard Products	Memphis, TN.	(800) 647-7874
Glynn Johnson	Indianapolis, IN.	(800) 525-0336
Von Duprin	Indianapolis, IN.	(800) 999-0408
Door Controls Int'l	Dexter, MI	(800) 742-3634
Rockwood Mfg	Rockwood, PA	(800) 458-2424
McKinney Hinge	Berlin, CT	(800) 346-7707
Precision Hardware	Indianapolis, IN	(317) 849-2250
Trimco	Los Angeles, CA	(800) 637-8746
Select Hinges	Portage, MI	(800) 585-1019
Stanley Hardware	Indianapolis, IN	(855) 364-2407
Dormakaba	Indianapolis, IN	(800) 523-8483

2.2 MATERIALS

A. Screws and Fasteners: Provide sex bolts for composite filled doors sized to thickness of door. Fasteners to be ferrous and non ferrous compatible with the product being applied.

B. Hinges:

1. Exterior Doors

   a. 1-3/4 thick up to 3'-0" – Stanley CB1960R-4-1/2" or McKinney TA314 – 4 ½"
   b. 1-3/4 thick over 3'-0" – Stanley CB1961R-5" or McKinney TA386 – 5"

2. Interior Doors

   a. 1-3/4 think up to 3'-0" – Stanley CB1900R-4-1/2" or McKinney TA714 – 4 ½"
   b. 1-3/4 thick over 3'-0" – Stanley CB1901R-5" or McKinney TA786 – 5"

3. The width of hinges shall be sufficient to clear trim. Furnish three hinges for doors up to 7'-6" high. Supply one additional hinge for every 2-1/2 feet or fraction thereof.

C. Continuous Hinges:

1. Provide Select SL24HD in nominal opening height less 1". Pemko CFM x height is an acceptable equal.

2. For access controlled openings, provide Select SL24HD x EPT. Pemko CFM x height x EPT is an acceptable equal.

C. Flush Bolts:

1. Manual flush bolts to be Rockwood 555. Trimco 3917-12 is an acceptable equal.

D. Locksets: Locksets are mortise type Schlage L9000 Series with functions as listed on schedule.

E. Lock Trim: Lever handles to be cast with wrought roses, Schlage 18A design.

F. Exit Device:

1. Provide Von Duprin 98 series. Precision APEX 2000 Series is an acceptable equal
2. Where vertical rod exits are scheduled, provide extended top rods for doors over 7'-0".
3. Fire exit hardware shall be used at fire-rated openings.
4. Trim for exit devices to be Von Duprin 18 or Precision equal.
5. Hardware supplier responsible for shim kits necessary to accommodate lite / device conflict.

G. Closers:

1. Provide LCN 4011 / 4111 series. Closers to be presized at factory. Non-handed closers are not permitted. Provide heavy duty arms at parallel arm applications as listed in schedule.
2. Provide special brackets as required at storefront locations.

H. Protective Plates: Metal Plates to be .050" thick and beveled 4 edges. Mop plates to be 6 x 1" less door width; Kickplates to be 8 X 2" less door width; Armor plates to be 36" x 2" less door width; Rockwood or Trimco are approved.

I. Door Stops:

1. Wall Stops: Rockwood 406 or Trimco 1274CS
2. Floor Stops: Rockwood 441 or Trimco 1211
3. Supply stops with appropriate anchoring device for wall condition in question.
4. Provide overhead stops equal to Glynn Johnson 450 series where wall or floor stop are not practical.

J. Thresholds and Weatherstripping:

1. Threshold at exterior doors: National Guard 803V or Pemko 177AV.
2. Weatherstripping: National Guard 160A or Pemko 303AV.

K. Smoke Seal: Provide National Guard 5050 at all fire rated openings. Pemko HSS2000 X 588 is an acceptable equal.

L. Electric Strikes: Provide HES 1006 x KM Option. Provide smart pack at all electric strike locations.

M. Power Supplies: Provide Von Duprin PS902-900-2RS at all locations. Precision ELR150 is an Acceptable equal.

N. Power Transfers: Provide Von Duprin EPT-10 transfers or Precision EPT-5

O. Silencers: Provide 3 each for single doors and 2 each per pair. Hager 307D.

P. Push Plates: Rockwood 70C or Trimco 1001-3

Q. Pulls: Rockwood 106 x 70C or Trimco 1017-3

R. Auto Door Bottom: National Guard 420 or Pemko 430

S. Deadlocks: Schlage L460 Series

T. Auto Operators: Dorma 100 with actuators. Include price for installation in this section.

U. Decorative Pulls: Rockwood RM2210 x opening height less 24" x midpost. Back-to-back mount.

V. Magnetic Locks: Schlage M420

2.3 FINISHES

Auto Operators	689
Coordinator	600
Butts (Exterior)	630
Butts (Interior)	652
Flush Bolts	626
Locksets	630
Closers	689
Push/Pulls	630
Thresholds / Weatherstripping	628
Mop Plates / Kickplates	630
Exit Devices	626
Exit Trim	626
Key Cabinet	Gray
Silencers	Gray
Cylinder	626
Wall Stops	630
Floor Stops	626
Smoke Seal	Charcoal
Electric Strike	630
Power Transfer	628

2.4 KEYING

A. Key into Existing Schlage Everest Primus 6MK System as directed by owner. Provide visual key control system with keying symbol stamped on all key bows.

.

B. Provide quantity of keys as follows: 6 each grandmaster, 6 each submaster, and 3 each per change key.

C. Hardware supplier to meet with owner and architect concerning keying and to receive written approval of key schedule prior to ordering material.

D. Construction master key at perimeter door openings. Provide 6 construction master keys.

E. A key cabinet will be provided to accommodate 200 keys. Key cabinet delivery prior to owner occupancy. Instruct owners representative of proper use of cabinet.

PART 3 – EXECUTION

3.1 EXAMINATION

A. Examine doors, frames and related material for problems that may exist with proper application of hardware. Do not proceed until defects are corrected.

3.2 INSTALLATION

A. Review with architect proper mounting locations of hardware as shown in "Locations for Architectural Hardware for Standard Steel Doors and Frame" as published by the (DHI).

3.3 FIELD QUALITY CONTROL

A. Following installation of hardware; provide an AHC to review the project to check for proper application of hardware as per the hardware and keying schedules. The AHC will also check for proper operation & adjustment of hardware.

3.4 **INSPECTION:** Clean and adjust hardware upon final completion. Repair or replace defective material.

3.5 **PROTECTION:** Leave manufacturer's protective wrapping on hardware (when practical) to prevent damage to hardware surface prior to owner acceptance of project.

PART 4 HARDWARE SETS

HW-1 Pr Doors 101 – 119A
Each to Receive:

2 Continuous Hinge	
2 Rim Cylinder	
2 Exit Device	9849NL - OP
2 Decorative Pulls	
2 Auto Operators	
2 Magnetic Locks	

Threshold, weatherstripping and seals by storefront supplier.
Card readers and other electrical accessories by security contractor.

HW-2 129B
Each to Receive:

1 Continuous Hinge	SL24 x EPT
1 Rim Cylinder	
1 Exit Device	QEL-98L
1 Closer	4111
1 Power Transfer	
1 Power Supply	

Threshold, weatherstripping and seals by storefront supplier.
Card readers and other electrical accessories by security contractor.

HW-3 Door 118
Each to Receive:

1 Cylinder

All other hardware by storefront mfr.

HW-4 Pr Doors 119
Each to Receive:

2 Cylinders
4 Decorative Pulls (2 back-to-back mount)

All other hardware by storefront mfr.
HW-5 Pr Doors 129C
Each to Receive:

2 Cylinders
2 Magnetic Locks
4 Decorative Pulls (2 back-to-back mount)

All other hardware by storefront mfr.
Card readers and other electrical accessories by security contractor.

HW-6 Doors S1-1, S1-2, S2-1A, S1-3, S2.2B
Each to Receive:

	Butts	
1	Exit Devices	98L-F x B/E
1	Closers	4011
1	Kickplate	
1	Stop	
1	Set Smoke Seal	

HW-7 Door S2-2A, S3.2
Each to Receive:

	Butts	
1	Rim Cylinder	
1	Exit Device	QEL-98L-F
1	Closer	
1	Kickplate	
1	Power Transfer	
1	Power Supply	

1 Stop
1 Smokeseal

Card reader and other electrical accessories by security contractor.

HW-8 Door 130C
Each to Receive:

	Butts	
1	Rim Cylinder	
1	Exit Device	QEL-98L
1	Closer	
1	Power Transfer	
1	Threshold	
1	Set Weatherstripping	
1	Power Supply	

Card reader and other electrical accessories by security contractor.

HW-9 Door 113
Each to Receive:

	Butts	
1	Lockset	L9080
1	Closer	
1	Electric Strike	
1	Kickplate	
1	Threshold	
1	Set Weatherstripping	

Card reader and other electrical accessories by security contractor.

HW-10 Doors 103 – 116 – 203
Each to Receive:

	Butts	
1	Rim Cylinder	
1	Exit Device	98L x 996NL
1	Closer	4111
1	Kickplate	
1	Stop	

HW-11 Door 311B
Each to Receive:

	Butts	
1	Rim Cylinder	

1	Exit Device	98L
1	Closer	4111
1	Kickplate	
1	Stop	

HW-12 Door 201
Each to Receive:

	Butts	
1	Exit Device	98L x B/E
1	Closer	4111 H-CUSH
1	Kickplate	
1	Stop	

HW-13 Pr Doors 130A – 130B
Each to Receive:

	Butts	
2	Rim Cylinders	
2	Exit Devices Concealed	9850WDC-F x 996L
2	Closers	4111- CUSH
2	Kickplates	

HW-14 Door 108 – 211 – 213 – 223 – 226A – 227 – 236A – 238B – 247 – 303A – 310 – 312 – 321B – 322B
Each to Receive:

	Butts	
1	Lockset	L9080
1	Closer	4011
1	Electric Strike	
1	Kickplate	
1	Stop	

Card readers and other electrical accessories by security contractor.

HW-15 Doors 106 – 109A – 109B – 114B – 302 – 303 – 306 – 311A – 320
Each to Receive:

	Butts	
1	Exit Device	L9080
1	Closer	4111
1	Electric Strike	
1	Kickplate	
1	Stop	

Card readers and other electrical accessories by security contractor.

HW-16 Pr Doors 135 – 207 – 245 – 308
Each to Receive:

	Butts	
2	Flush Bolts	
1	Lockset	L9080
1	Closer	4111
1	Overhead Stop	
1	Stop	

HW-17 Doors 102 – 209A
Each to Receive:

	Butts	
1	Lockset	L9050
1	Closer	4011
1	Kickplate	
1	Stop	

HW-18 Doors 202 – 206A – 206B – 321A – 322A - 331
Each to Receive:

	Butts	
1	Lockset	L9050
1	Closer	4111
1	Kickplate	
1	Stop	

HW-19 Doors 107 – 208 – 209B – 214A – 246A – 246B
Each to Receive:

	Butts	
1	Lockset	L9080
1	Closer	4111 – CUSH
1	Kickplate	
1	Stop	
1	Auto Door Bottom*	

Auto Door Bottom @ 107 & 214A only.

HW-20 Door 137
Each to Receive:

	Butts	
1	Deadlock	L460

1	Closer	4111H – CUSH
1	Armor Plate	

HW-21 Doors 134 – 243 – 307
Each to Receive:

	Butts	
1	Lockset	L9080
1	Mop Plate	
1	Overhead Stop	
1	Stop	

HW-22 Doors 111 – 121 – 122 – 123 – 125 – 126 – 215 – 217 – 221 – 225 – 226B – 231 – 230 – 232 – 233 – 234A – 234B – 235 – 237 – 248 – 249 – 313 – 314 – 315 – 316 – 317 – 318 – 319 – 323 – 325 – 327 – 328 – 329 – 330 - 334
Each to Receive:

	Butts	
1	Lockset	L9050
1	Stop	

HW-23 Doors 112 – 117 - 124 – 128A – 212 – 214B – 216 – 219 – 220 – 229 – 242 – 309 – 312
Each to Receive:

	Butts	
1	Lockset	L9080
1	Stop	

HW-24 Doors 105B – 127 – 132 – 241B – 244B – 324
Each to Receive:

	Butts	
1	Privacy	L9044
1	Closer	4011
	Kickplate	
	Mop Plate	
	Stop	

HW-25 Doors 104 – 105 – 204 – 205 – 241 – 244 – 304 – 305
Each to Receive:

	Butts
1	Push
1	Pull
1	Closer
1	Kickpate

1 Mop Plate
1 Stop

HW-26 Doors 120 – 128
Each to Receive:

Butts
1 Passage L9010
1 Stop

END OF SECTION

SECTION 09 6620

EPOXY TERRAZZO FLOORING

PART 1 - GENERAL

1.01 RELATED DOCUMENTS

A. Drawings and general provisions of the Contract, including General and Supplementary Conditions and Division 1 Specification Sections, apply to this Section.

1.02 SUMMARY

A. Section Includes:
   1. Thin-set Epoxy Terrazzo Flooring including preparation of substrates.
   2. Thin-set pre-cast epoxy terrazzo wall base units.
   3. Related accessories.

B. Related Sections:
   1. Section 03 3000, Cast In Place Concrete.
   2. Section 04 2000, Unit Masonry.
   3. Section 05 5100, Metal Stairs.
   4. Section 07 9005, Joint Sealants.
   5. Section 09 9000, Painting.
   6. Section 09685 - Carpet Tile and interface with other adjacent floor finish material (for transition details).

1.03 SUBMITTALS

A. Manufacturer's product data for each type of terrazzo and accessory. System will be evaluated on the basis of standards. For tests not listed in published data, manufacturer shall supply missing data according to standard referenced.
   1. Physical properties.
   2. Performance properties.
   3. Specified tests.
   4. Material Safety Data Sheet.
   5. Manufacturer's standard warranty.
   6. Shop Drawings. Include terrazzo installation requirements. Include plans, elevations, sections, component details and attachments to other work. Show layout of the following:
      a. Divider strips.
      b. Control- and expansion-joint strips.
      c. Base and border strips.
      d. Abrasive strips.
      e. Precast terrazzo jointing and edge configurations including anchorage details.
      f. Terrazzo patterns.
   7. Samples for Verification: Match Architect's samples for each type, material, color and pattern of terrazzo and accessory required showing the full range of color, texture and pattern variations expected. Label each terrazzo sample to identify manufacturer's matrix color and aggregate types, sizes and proportions. Prepare samples of same thickness and from same material to be used for the Work in size indicated below:
      a. Epoxy Terrazzo: minimum 6” x 6” (152.4 mm x 152.4 mm) sample of each color and type of terrazzo.
      b. Precast Epoxy Terrazzo: minimum 6” x 6” (152.4 mm x 152.4 mm) sample of each color and type of terrazzo.
      c. Accessories: 6” length (152.4 mm) of each kind of divider strip, stop strip and control joint strip required.
   8. Manufacturer Experience:
      a. Submit proof of Associate membership in NTMA.
      b. Furnish a list of at least five (5) epoxy terrazzo projects using material being submitted for this project installed during the last five (5) years of the same scope, complexity and at least 50 percent of the square footage.
   9. Qualification Data: For qualified Installer.

a. Submit proof of Contractor membership in NTMA.
b. Furnish a list of at least five (5) epoxy terrazzo projects using material being submitted for this project installed during the last five (5) years of the same scope, complexity and at least 50 percent of the square footage.

10. Material Test Reports: For moisture and/or relative humidity of substrate.
11. Maintenance Data: Submit copies of NTMA maintenance recommendations and copies of manufacturer's instructions

1.04 QUALITY ASSURANCE

A. Installer Qualifications: A qualified installer who is acceptable to architect and epoxy terrazzo manufacturer to install manufacturer's products.
1. Engage a terrazzo contractor with at least five (5) years of satisfactory experience in installation of epoxy terrazzo. Terrazzo contractor shall demonstrate experience during last five (5) years of at least (5) projects of comparable scope and complexity of at least 50 percent of the total square footage of this project
2. Engage an installer who is a contractor member of NTMA.
3. Source Limitations:
a. Obtain primary Epoxy Terrazzo Flooring System materials including membranes, primers, resins and hardening agents from a single manufacturer with proof of NTMA membership.
b. Obtain aggregates, divider strips, sealers, cleaners from source recommended by primary materials manufacturer.
4. Pre-installation Conference: Conduct conference at Project site to comply with requirements in Section 01200 - Project Meetings. Review methods and procedures related to terrazzo including, but not limited to, the following:
a. Inspect and discuss installation procedures, joint details, jobsite conditions, substrate specification, vapor barrier details and coordination with other trades.
b. Review and finalize construction schedule and verify availability of materials, Installer's personnel, equipment and facilities needed to make progress and avoid delays.
c. Review special terrazzo designs and patterns.
d. Review dust control procedures.
e. Review plans for concrete curing and site drying to enable timely achievement of suitable slab moisture conditions.
f. Prior to Preinstallation Meeting all required submittals and shop drawings shall be reviewed and approved, and the mockup constructed, reviewed and approved.
5. NTMA Standards: Comply with NTMA's “Terrazzo Specifications and Design Guide” and with written recommendations for terrazzo type indicated unless more stringent requirements are specified.
6. Mockups: Build mockups to verify selections made under sample submittals and to demonstrate aesthetic effects and set quality standards for materials and execution.
a. Build mockups for terrazzo including accessories.
1) Construct up to 3 removable 8'x8' sample panels to be evaluated at locations as directed.
2) All flooring materials in lobbies, including terrazzo flooring must be approved by the Architect as part of hte Mockup review prior to Contractor being released to proceed with installation. Owner and Architect reserve the right to adjust or reselect finishes, colors and patterns as part of the mockup review process.

1.05 DELIVERY, STORAGE AND HANDLING

A. Deliver materials to Project site in supplier's original wrappings and containers, labeled with source's or manufacturer's name, material or product brand name and lot number if any.

B. Store materials in their original, undamaged packages and containers, inside a well-ventilated area protected from weather, moisture, soiling, extreme temperatures and humidity.
1. Storage temperatures should be between 50°F to 80°F.

1.06 PROJECT CONDITIONS

A. Terrazzo contractor shall, prior to surface preparation:

1. Evaluate slab condition, including slab moisture content and extent of repairs required, if any.
2. Maintain the ambient room and floor temperature at 50°F or above for a period extending 72 hours before, during and after floor installation. Concrete to receive epoxy terrazzo shall have cured for at least 28 days and be free of all curing compounds. Test concrete substrate to determine acceptable moisture levels prior to installation. Testing should be conducted according to ASTM F2170 (determining relative humidity in concrete slabs using in situ probes). An effective in situ probe for relative humidity testing is the Rapid RH available from T&M Supply.
3. Prior to and during each day of installation, the terrazzo contractor shall verify that the dew point is at least 5°F (-15°C) less than the slab and air temperature.
4. Acceptable Substrates:
   a. Level tolerance: Concrete sub-floor shall be level with a maximum variation from level of 1/4" in 10 feet. Any irregularity of the surface requiring patching and/or leveling shall be done using Fill and selected aggregates as recommended by manufacturer.
   b. Concrete floor shall be prepared mechanically by shot blasting or by grinding with Wolverine Scarifying Diamonds in accordance with ICRI Guideline No. 03732. Specifically, surface preparation results should achieve a CSP3-CSP5 profile.
   c. Concrete floor shall receive a steel trowel finish.
   d. Concrete shall be cured a minimum of 28 days. No curing agents are to be used in areas to receive terrazzo.
   e. Concrete slab shall have an efficient moisture vapor barrier (suggested minimum: 15 mils thickness) directly under the concrete slab. Moisture barrier shall NOT be punctured.
   f. Saw cutting of control joints must be done between 12 and 24 hours after placement of the structural concrete and at a frequency compatible to ACI recommendations.
5. Provide permanent lighting or, if permanent lighting is not in place, simulate permanent lighting conditions during terrazzo installation.
6. Provide protection from other trades prior to final acceptance by owner.

PART 2 - PRODUCTS

2.01 2.01 EPOXY TERRAZZO

A. Manufacturers: Basis of Design:
   1. Terroxy® Resin Systems Epoxy Matrix by Terrazzo & Marble Supply Companies, Wheeling, IL (www.tmsupply.com)

B. Other Acceptable Manufacturers:
   1. Key Resin Company Product: Key Epoxy Terrazzo Thinset System: www.keyresin.com
   2. Master Terrazzo Technologies Product: Morricite Thin Set Epoxy
   3. Substitutions: Comply with the requirements of Section 01400 - Product Requirements

C. Materials:
   1. Primer: Terroxy® Primer or Terroxy® Moisture Vapor Primer (for slabs on-grade or lightweight and green concrete).
      a. Physical properties of moisture mitigating primer shall have a maximum of 0.3 perms with 100% RH.
   2. Flexible Reinforcing Membrane: Terroxy® Iso-Crack Epoxy Membrane, for substrate crack preparation and reflective crack reduction.
      a. Reinforcement: Fiberglass scrim.
   3. Epoxy Matrix: Terroxy® Epoxy Matrix and in color required for mix indicated.
      a. Physical properties without aggregates. All specimens cured for 7 days at 750F plus or minus 20F and 50 percent plus or minus 2 percent RH. This product shall meet the following requirements:

Property	Test Method	NTMA Requirements	Terroxy® Thin-set Epoxy Terrazzo Typical Results
Hardness	ASTM D-2240 using Shore-D Durometer	60-85	75-85
Tensile Strength	ASTM D-638	3,000 psi min.	4,800 psi min.

Compressive Strength	ASTM D-695 Specimen B cylinder	10,000 psi min.	12,000 psi min.
Flexural Strength	ASTM D-790	Not specified	4,500 psi min.
Chemical Resistance	ASTM D-1308 seven days at room temperature by immersion method.	No deleterious effects: Distilled Water Mineral Oil Isopropanol Ethanol 0.025 Detergent Solution 1% Soap Solution 10% Sodium Hydroxide 10% Hydrochloric Acid 30% Sulfuric Acid 5% Acetic Acid	No deleterious effects: Distilled Water Mineral Oil Isopropanol Ethanol 0.025 Detergent Solution 1% Soap Solution 10%Sodium Hydroxide 10% Hydrochloric Acid 30% Sulfuric Acid 5% Acetic Acid

a. Physical properties with aggregates. For Epoxy Matrix blended with three volumes of Georgia White marble blended 60% #1 chip and 40% #0 chip, ground and grouted with epoxy resin according to Installation Specifications, finishing to a nominal 1/4" thickness. All specimens cured for 7 days at 750F plus or minus 20F and 50 percent RH plus or minus 2 percent RH. This finished Epoxy Matrix shall meet the following requirements:

Property	Test Method	NTMA Requirements	Terroxy® Thin-set Epoxy Terrazzo Typical Results
Flammability	ASTM D-635	Self Extinguishing, extent of burning 0.25 inches max.	Self Extinguishing, extent of burning 0.25 inches max.
Thermal Cefficient of Linear Expansion	ASTM D-696	25 x 10 (-6) inches per inch per degrees to 140 degrees F.	25 x 10 (-6) inches per inch per
Bond Strength	ACI COMM 403, Bulletin 59-43 (Pages 1139 through 1141)	300 psi (100% Concrete Failure)	300 psi (100% Concrete Failure)

4. Aggregates, Marble Glass or Mother of Pearl, complying with NTMA gradation standards for mix indicated and containing no deleterious or foreign matter.
   a. Abrasion and Impact Resisrtance: Less than 40% Loss per ASTM C-131.
   b. 24 Hour Absorption Rate: Less than 0.74%.
   c. Dust Content: Less than 1.0% by Weight.
   d. Post Industrial, or ost Consumer Recycled Content: 10%
   e. Finishing Grout: Terroxy® Epoxy Matrix or Terroxy® Clear Resin as recommended by Terroxy® Resin Systems.

D. Mix: Comply with NTMA's "Terrazzo Specifications and Design Guide" and manufacturer's written instructions for matrix and aggregate proportions and mixing.
   1. Color and Pattern Schedule: Where the following designations are indicated on the Drawings, provide specified terrazzo matrices matching architect's samples.
   2. Terrazzo Matrix and Finish
      a. Resin: #2001 White
      b. 40% China White #0,1,2
      c. 20% Smoke Gray Glass #1,2
      d. 40% SM One Sided Mirror
      e. Ebony Glass Filler
      f. 200 Grit Finish

g. 2 Coats of Terroxy Water Based Urethane

2.02 STRIP MATERIALS

A. Thin set Divider Strips: L type
   1. Material: As selected by Architect from manufacturer's full range of options.
   2. Guide for L type Divider Strips for Thin Set Epoxy Terrazzo Systems:

System Thickness	Strip Height	Strip Width
1 / 4 Inch System	1 / 4 "	1 / 8 " 16 Gage
3 / 8 inch System	3 / 8 "	1 / 4 " 16 Gage

B. Control-Joint Strips: Separate double L-type angles back to back with minimum 1/8" width between. Fill joint and area between strips with semi-flexible joint filler. Match material, thickness and color of divider strips and depth required for topping thickness indicated.

C. Construction-Joint (Cold-Joint) Strips: Separate double L-type angles back to back with minimum 1/8" width between. Fill joint and area between strips with semi-flexible joint filler. Match material, thickness and color of divider strips and depth required for topping thickness indicated.

D. Expansion-Joint Strips: Separate double L-type angles, positioned back to back with minimum 1/8" width between. Fill area between strips with semi-flexible joint filler. Match material, thickness and color of divider strips and depth required for topping thickness indicated.

E. Accessory Strips: Match divider strip width, material and color unless otherwise indicated. Use the following types of accessory strips as required to provide a complete installation:
   1. Base-bead strips for exposed top of terrazzo base.
   2. Edge-bead for exposed edges of terrazzo.
   3. Nosings for terrazzo stair treads and landings.

2.03 MISCELLANEOUS ACCESSORIES

A. Strip Adhesive: 100% solids epoxy resin adhesive recommended by Terroxy® Resin Systems.
   1. Use adhesive that has a VOC content of 50g/L or less when calculated according to 40 CFR 59, Subpart D (EPA Method 24).

B. Anchoring Devices:
   1. Strips: Provide mechanical anchoring devices for strip materials as required for secure attachment to substrate.
   2. Precast Terrazzo: Provide mechanical anchoring devices as recommended by TerrazzoContractor for proper anchorage and support of units for conditions of installation and support.

C. Patching and Fill Material: Terroxy® Fill and selected aggregates as recommended by Terroxy® Resin Systems.

D. Joint Compound: Terroxy® Joint Filler, color to be selected by architect to match/compliment terrazzo.

E. Cleaner: Terroxy® Terra Clean, a neutral cleaner with pH factor between 7 and 10 specifically designed for terrazzo.

F. Surface Finish System: Terroxy® Natural Finish System, level of polish to be specified by architect in accordance with desired appearance and level of reflectivity.

G. Sealer: Slip- and stain-resistant sealer that is chemically neutral with a pH factor between 7 and 10, a standard coefficient of friction of 0.6 or higher, does not affect physical properties of terrazzo and complies with NTMA's "Terrazzo Specifications and Design Guide."
   1. Terroxy® WB Urethane or Terroxy® WB Penetrating Sealer, high performance, high gloss, chemical resistant urethane sealer.
   2. Terroxy® WB Acrylic Sealer, medium gloss, water-based sealer.

PART 3 – EXECUTION

3.01 EXAMINATION

A. Examine substrates and areas, with Terrazzo Contractor present, for compliance with requirements for installation tolerances and other conditions affecting performance.

B. Proceed with installation only after unsatisfactory conditions, including level tolerances, have been corrected.

3.02 PREPARATION

A. Clean substrates of substances, including oil, grease and curing compounds, that might impair terrazzo bond. Provide clean, dry and neutral substrate for terrazzo application.

B. Concrete Slabs:
   1. Provide sound concrete surface free of laitance, glaze, efflorescence, curing compounds, form release agents, dust, dirt, grease, oil and other contaminants incompatible with terrazzo.
      a. Prepare concrete mechanically by shot blasting or by diamond grinding. Surface preparation results should achieve a CSP3-CSP5 profile according to International Concrete Repair Institute Guideline No. 03732.
      b. Repair or level damaged and deteriorated concrete according to Terroxy® Resin Systems Technical Bulletin 008 Substrate Leveling Requirements for Terroxy® Thin- Set Epoxy Terrazzo.
      c. Repair cracks and non-expansion joints greater than 1/16" (1.6 mm) wide according to Terroxy® Resin Systems Technical Bulletin 009 Crack Detailing and Joint Treatments for Terroxy® Resin Thin-set Epoxy Terrazzo.
   2. Verify that concrete substrates are visibly dry and free of moisture.
   3. Moisture Testing:
      a. Test for moisture according to ASTM F2170 (determining relative humidity in concrete slabs using in situ probes).
      b. Proceed with installation only after substrates have a maximum relative humidity measurement reading less than 80% If relative humidity measurement reading is greater than or equal to 80%, Terroxy® Moisture Vapor Primer is recommended.Apply to terrazzo substrates according to Terroxy® Resin Systems Moisture Vapor Primer Product Data Sheet.

C. Protect other work from dust generated by grinding operations. Control dust to prevent air pollution and comply with environmental protection regulations.
   1. Erect and maintain temporary enclosures and other suitable methods to limit dust migration and to ensure adequate ambient temperatures and ventilation conditions during installation.

3.03 EPOXY TERRAZZO INSTALLATION

A. General:
   1. Comply with NTMA's written recommendations for terrazzo and accessory installation.
   2. Place, rough grind, grout, cure grout, fine grind and finish terrazzo according to Terroxy® Resin Systems Epoxy Matrix Product Data Sheet and NTMA's "Terrazzo Specifications and Design Guide."
   3. Ensure that matrix components and fluids from grinding operations do not stain terrazzo by reacting with divider and control-joint strips.
   4. Delay fine grinding until heavy trade work is complete and construction traffic through area is restricted.

B. Thickness: 3/8"

C. Flexible Reinforcing Membrane:
   1. Normal Crack Isolation: Route all cracks and fill using semi-flexible Terroxy® Joint Filler. Apply Terroxy® Iso-Crack Epoxy Membrane (spread at 40 mils thickness) across the crack allowing 12 inches on either side. Embed fiberglass scrim into wet membrane and saturate with additional membrane material.
   2. Extensive Cracking: Route all cracks and fill using semi-flexible Terroxy® Joint Filler. Apply Terroxy® Iso-Crack Epoxy Membrane (spread at 40 mils thickness) over prepared substrate to produce full substratecoverage in areas to receive terrazzo.

D. Primer: Apply to terrazzo substrates according to Terroxy® Resin Systems Primer Product Data Sheet.

E. Strip Materials:
   1. Divider ansd Accessory Strips:
      a. Install strips in adhesive setting bed without voids below strips or mechanicallyanchor strips as required to attach strips to substrate.
      b. Control-Joint Strips: Separate double L-type angles, positioned back to back with minimum 1/8" width between. Fill joint and area between strips with semi-flexible Terroxy® Joint Filler. Match material, thickness and color of divider strips and depth required for topping thickness indicated.

c. Construction-Joint (Cold-Joint) Strips: Separate double L-type angles, positionedback to back with minimum 1/8" width between. Fill joint and area between strips with semi-flexible Terroxy® Joint Filler. Match material, thickness and color of divider strips and depth required for topping thickness indicated.

d. Expansion-Joint Strips: Separate double L-type angles, positioned back to back with minimum 1/8" width between. Fill area between strips with semi-flexible Terroxy® Joint Filler. Match material, thickness and color of divider strips and depth required for topping thickness indicated.

F. Placing Terrazzo:

1. Mix epoxy matrix with chips and fillers in ratios directed by Terroxy® Resin Systems.
2. Trowel apply terrazzo mixture over epoxy primer to provide a dense flat surface to top of divider strips. Allow to cure per Terroxy® Resin Systems recommendations before rough grinding.

G. Rough Grinding: Grind with 24 grit silicon carbide or D-36 Diamond matrix stones until all Terrazzo strips and marble chips are uniformly exposed.

H. Grouting:

1. Clean floor with clean potable water and rinse.
2. Remove excess rinse water by wet vacuum, dry and fill voids with Terroxy® Resin Systems Epoxy Matrix or Clear Resin.
3. Allow grout to cure. Grout may be left on terrazzo until other trades work is completed.

I. Polishing: Grind with 120 grit or finer stones until all grout is removed from surface. Repeat rough grinding, grout coat and polishing if large terrazzo chip voids exist after initial polishing. Produce surface with a minimum of 70 percent aggregate exposure.

3.04 CLEANING AND PROTECTION

A. Cleaning: Remove grinding dust from installation and wash all surfaces with Terroxy® Terra Clean.

B. Sealing: Apply Slip- and stain-resistant sealer that is chemically neutral with a pH factorbetween 7 and 10; does not affect physical properties of terrazzo and complies with NTMA's "Terrazzo Specifications and Design Guide.

C. Protection: Upon completion, the Work shall be ready for final inspection and acceptance bythe owner or his agent. Provide final protection and maintain conditions, in a manner acceptable to Terrazzo Contractor, that ensure terrazzo is without damage or deterioration.

3.05 SCHEDULES

A. See Drawings

END OF SECTION

SECTION 10 1400

SIGNAGE

PART 1 GENERAL

1.01 SECTION INCLUDES

A. Building Identification: Dimensional Letter Metal Signage.

B. Interior Entity Identification (County Seal) : Dimensional Letter Metal Signage and Graphics

C. Room identification including changeable message signs

D. Interior directional and informational signage.

E. Egress path Identification.

F. Flag, or Blade signs.

G. Emergency evacuation maps.

H. Building identification signs.

1.02 RELATED REQUIREMENTS

A. Section 05 5100 - Metal Stairs: Photoluminescent stair nosings.

B. Section 22 0553 - Identification for Plumbing Piping and Equipment.

C. Section 26 0553 - Identification for Electrical Systems.

D. Section 26 5100 - Interior Lighting: Exit signs required by code.

1.03 PRICE AND PAYMENT PROCEDURES

A. Room and door signs are not covered by an allowance.

1.04 REFERENCE STANDARDS

A. 36 CFR 1191 - Americans with Disabilities Act (ADA) Accessibility Guidelines for Buildings and Facilities; Architectural Barriers Act (ABA) Accessibility Guidelines; current edition.

B. ADA Standards - Americans with Disabilities Act (ADA) Standards for Accessible Design; 2010.

C. ICC A117.1 - Accessible and Usable Buildings and Facilities; 2009.

D. ASTM D635 - Standard Test Method for Rate of Burning of Plastics in a Horizontal Position.

E. ASTM D1929 - Standard Test Method for Determining Ignition Temperature of Plastics.

F. ASTM E84 - Standard Test Method for Surface Burning Characteristics of Building Materials.

G. UL 723 - Standard for Test for Surface Burning Characteristics of Building Materials.

1.05 SUBMITTALS

A. See Section 01 3010 - Administrative Requirements, for submittal procedures.

B. Product Data: Manufacturer's printed product literature for each type of sign, indicating sign styles, font, foreground and background colors, locations, overall dimensions of each sign.

C. Signage Schedule: Provide information sufficient to completely define each sign for fabrication, including room number, room name, other text to be applied, sign and letter sizes, fonts, and colors.

1. When room numbers to appear on signs differ from those on drawings, include the drawing room number on schedule.
2. When content of signs is indicated to be determined later, request such information from Owner through Architect at least 2 months prior to start of fabrication; upon request, submit preliminary schedule.
3. Submit for approval by Owner through Architect prior to fabrication.

D. Samples: Submit two samples of each type of sign, of size similar to that required for project, illustrating sign style, font, and method of attachment.

E. Selection Samples: Where colors are not specified, submit two sets of color selection charts or chips.

F. Verification Samples: Submit samples showing colors specified.

G. Manufacturer's Installation Instructions: Include installation templates and attachment devices.

H. Maintenance Materials: Furnish the following for Owner's use in maintenance of project.
   1. See Section 01 6000 - Product Requirements, for additional provisions.
   2. Curved Sign Media Suction Cups: One for each 100 signs; for removing media.

1.06 QUALITY ASSURANCE

A. Room and Door Signs: Provide a sign for every doorway, whether it has a door or not, excluding corridors, lobbies, and similar open areas.

B. The intent of these specifications to establish a sign standard for the Owner including but not limited to, wall-mounted directional signs, primary room identification, restrooms, conference rooms and all code compliant Braille signage.

C. Manufacturer Qualifications: Company specializing in manufacturing the products specified in this section with minimum three years of documented experience.

1.07 DELIVERY, STORAGE, AND HANDLING

A. Package signs as required to prevent damage before installation.

B. Package room and door signs in sequential order of installation, labeled by floor or building.

C. Store tape adhesive at normal room temperature.

1.08 FIELD CONDITIONS

A. Do not install tape adhesive when ambient temperature is lower than recommended by manufacturer.

B. Maintain this minimum temperature during and after installation of signs.

PART 2 PRODUCTS

2.01 MATERIALS (GENERAL REQUIREMENTS)

A. Interior Signage for Room, Door, Area and Wayfinding Signs
   1. Basis of Design Substrate Material Acrylic Photopolymer
      a. Novacryl Photopolymer : Nova Polymers®, Inc., www.novapolymers.com

B. Interior and Exterior Signage: individual Metal Dimensional Letter Signage and Graphics.
   1. 3/8"-1/2" Laser Cut Plate Aluminum, Pin, or Flush Mounted as indicated on Drawings.

C. Substitutions: See Section 01 6000 - Product Requirements.

2.02 MANUFACTURERS

A. Basis of Design Manufacturer / Fabricator:
   1. Bell Company, Inc.: www.bellcoinc.com

B. Other Acceptable Manufacturers / Fabricators
   1. Fravert Services, Inc.: www.fravert.com.
   2. KSI Knight Sign Industries, Inc. : www.knightsign.com
   3. Substitutions: See Section 01 6000 - Product Requirements.
      a. <u>NOTE:</u> Other Acceptable fabricators to be Nova Polymer® Certified, Preferred Fabricators, able to become so certified, or acceptable to Owner.

C. Dimensional Letter Signs:

2.03 SIGNAGE APPLICATIONS AND OWNER'S GENERAL SIGNAGE REQUIREMENTS

A. Accessibility Compliance: Signs are required to comply with ADA Standards and ICC A117.1, unless otherwise indicated; in the event of conflicting requirements, comply with the most comprehensive and specific requirements.

B. If required text and graphics are not indicated in specification or on drawings, obtain Owner's instructions as to text and graphics prior to preparation of shop drawings.

C. Typography: See Drawings. Copy shall be a clean and accurate reproduction of typeface(s) specified. Upper and lower case and all caps as indicated in Sign Type drawings and Signage Schedule. Letter spacing to be set by manufacturer.

D. Arrows, symbols and pictograms will be provided in style, sizes, colors and spacing as indicated in drawings for each sign system.

E. Grade II Braille as the US standard and shall be the standard for this Project.

F. Design:
   1. Text/Graphics Placement: As indicated on Contract Drawings.
   2. Font: As indicated on the Contract Drawings.

G. Paints and Coatings
   1. Signs must be surface painted using Proprietary Acrylic Polyurethane paint. 4 mil wet / 2mil dry (WFT / DFT).
   2. Signs must be sealed with a proper 4mil wet / 2 mil dry clear top coat.

H. Adhesive Mounting
   1. Signs shall have Double sided, VHB Tape by 3M, or equal applied to backs and be mounted along with installer's silicone

2.04 OWNER'S SPECIFIC REQUIREMENTS FOR PRODUCTION

A. No material substitutions are allowed, including, but not limited to, applique/raster, direct print or zinc, which are prohibited.

B. Material Construction Dimensional Metal (Exterior Building and Address Identification, Entity Identification, Interior Entity Identification and Graphics).
   1. Composition: Depending upon character size 3/8"-1/2" Laser Cut Plate Aluminum
   2. Sustainable Certification: Minimum 65 percent pre-consumer recycled content.
   3. Base thickness: 0.060 inch (1.5 mm) Non-glare PETG used in conjunction with acrylic fillers and acrylic backer to produce window style signs
   4. Base thickness: 0.118 inch (3.0 mm) Non-glare PETG for all standard, non-window style signs

C. Material Construction (Interior Room, Door Wayfing and Informational Signage)
   1. Composition: 0.032 inch (0.8 mm) thick moisture resistant, non-glare interior nylon photopolymer on ultraviolet resistant clear PETG sign base, single piece construction. Laminated photopolymers, added-on characters, and engraved characters are not acceptable.
   2. Sustainable Certification: Minimum 40 percent pre-consumer recycled content.
   3. Base thickness: 0.060 inch (1.5 mm) Non-glare PETG used in conjunction with acrylic fillers and acrylic backer to produce window style signs
   4. Base thickness: 0.118 inch (3.0 mm) Non-glare PETG for all standard, non-window style signs

D. FInishes
   1. Colors: To match the Owner's (Shelby County's) existing Current Design package
   2. Custom PMS Cool Gray Match Background with White Text.
      a. Without exception Signs must be surface painted using Proprietary Acrylic Polyurethane paints as directed by the Owner.
   3. Sizes per drawings to match existing Shelby County Current Sign Design package

E. Performance Requirements
   1. Surface burning characteristics: Flame spread/smoke developed rating less than 75/120, tested to ?STM E 84 and UL 723.
   2. Rate of burning: Tested to ASTM D 635 at nominal 0.060 inch (1.5 mm) thickness with resulting Classification CC1.
   3. Vertical burning: Tested to UL 94, classified as 94V-2 in thickness of 0.118 inch (3.0 mm) or greater and 94HB in thicknesses less than 0.118 inch (3.0 mm).
   4. Self-ignition temperature: 800 degrees F (427 degrees C), tested to ASTM D 1929.

F. Sign Type: Profile as indicated signs with applied character panel media as specified above.
   1. Provide "tactile" signage, with letters raised minimum 1/32 inch and Grade II braille.
   2. Character Height: As indicated.
   3. Sign Height: 2 inches, unless otherwise indicated.

4. Office Doors: Identify with Room Names and Numbers provided by Owner including window with sliding "IN / OUT" indicator and changeable "Occupant Name"..
5. Conference and Meeting Rooms: Identify with Room Names and Numbers Provided by Owner; in addition, provide "window" section with sliding "In Use/Vacant" indicator.
6. Service Rooms: Identify with the room names and numbers indicated on drawings.
7. Rest Rooms: Identify with pictograms, the names "MEN" and "WOMEN", room numbers indicated on the drawings, and braille.

G. Interior Directional and Informational Signs:
1. Sign Type: Same as room and door signs.
2. Sizes: As indicated on drawings.
3. Wording of signs is scheduled on drawings.
4. Where suspended, ceiling mounted, or projecting from wall signs are indicated, provide two-sided signs with same information on both sides.

H. Emergency Evacuation Maps:
1. Allow for one map per elevator lobby.
2. Map content to be provided by Owner.
3. Use clear plastic panel silk-screened on reverse, in brushed aluminum frame, screw-mounted.

I. Building Identification Signs:
1. Use individual metal letters.
2. Mount on exterior Canopy Fascia in location indicated on drawings.

J. Other Dimensional Metal Letter Signs: Wall-mounted.

2.05 DIMENSIONAL LETTERS

A. Metal Letters:
1. Metal: Aluminum Plate.
2. Metal Thickness: Manufacturer's standard for letter size.
3. Letter Height: As indicated on signage schedule.
4. Text and Typeface:
   a. Character Font and Case: As scheduled.
5. Finish: Brushed, satin.
6. Mounting: As indicated on drawings.

2.06 ACCESSORIES

A. Concealed Screws: Stainless steel, or other non-ferrous metal.

B. Tape Adhesive: Double sided tape, permanent adhesive.

PART 3 EXECUTION

3.01 EXAMINATION

A. Verify that substrate surfaces are ready to receive work.

3.02 INSTALLATION

A. Install in accordance with manufacturer's instructions.

B. Install neatly, with horizontal edges level.

C. Locate signs and mount at heights indicated on drawings and in accordance with ADA Standards and ICC A117.1.

D. Protect from damage until Substantial Completion; repair or replace damaged items.

END OF SECTION

SECTION 10 5723

CLOSET AND UTILITY SHELVING

PART 1 GENERAL

1.01 SECTION INCLUDES

A. Wall mounted wire closet shelving.

B. Laminated shelves associated with wire shelving.

C. Accessories.

1.02 RELATED REQUIREMENTS

A. Section 06 1000 - Rough Carpentry: Blocking in walls for attachment of shelving.

B. Section 09 2116 - Gypsum Board Assemblies: Blocking in metal stud walls for attachment of standards.

1.03 REFERENCE STANDARDS

A. NEMA LD 3 - High-Pressure Decorative Laminates; 2005.

1.04 SUBMITTALS

A. See Section 01 3000 - Administrative Requirements, for submittal procedures.

B. Product Data: Manufacturer's data sheets on each product to be used, with installation instructions.

C. Shop Drawings: Provide drawings prepared specifically for this project; show dimensions of shelving and attachment to substrates.

D. Selection Samples: For each color selection required, submit color chips representing manufacturer's full range of available colors and finish.

1.05 QUALITY ASSURANCE

A. Manufacturer Qualifications: Company specializing in manufacturing products specified in this section, with not less than three years of documented experience.

1.06 DELIVERY, STORAGE, AND HANDLING

A. Store products in manufacturer's unopened packaging until ready for installation.

B. Store products under cover and elevated above grade.

C. Store flat to prevent warpage and bending.

PART 2 PRODUCTS

2.01 MANUFACTURERS

A. Coated Wire Storage Shelving:
   1. ClosetMaid Corporation : www.closetmaid.com/#sle.
   2. RubberMaid Closet and Organization Products : www.rubbermaidcloset.com/#sle.
   3. Substitutions: See Section 01 6000 - Product Requirements.

2.02 SHELVING APPLICATIONS

A. Layout and configuration: As shown on Drawings
   1. Shelf Depth: 12 inches, unless otherwise indicated.

2.03 MATERIALS

A. Wire Shelving: Factory-assembled coated wire mesh shelf assemblies for wall-mounting, with all components and connections required to produce a rigid structure that is free of buckling and warping.
   1. Construction: Cold-drawn steel wire with average tensile strength of 100,000 psi resistance welded into uniform mesh units, square, rigid, flat, and free of dents or other distortions, with wires trimmed smooth.
   2. Coating: PVC or epoxy, applied after fabrication, covering all surfaces.
   3. PVC Coating: 9 to 11 mils thick.
   4. Epoxy Coating: Non-toxic epoxy-polyester powder coating baked-on finish, 3 to 5 mils thick.

5. Standard Mesh Shelves: Cross deck wires spaced at 1 inch.

B. Mounting Hardware: Provide manufacturer's standard mounting hardware; include support braces, wall brackets, back clips, end clips, poles, and other accessories as required for complete and secure installation; factory finished to match shelving.

C. Fasteners: As recommended by manufacturer for mounting substrates.

PART 3 EXECUTION

3.01 EXAMINATION

A. Inspect areas to receive shelving, to verify that spaces are properly prepared to receive shelf units, and are of dimensions indicated on shop drawings.

B. Verify appropriate fastening hardware.

C. Do not begin installation until substrates have been properly prepared.

D. If substrate preparation is the responsibility of another installer, notify Architect of unsatisfactory preparation before proceeding.

3.02 PREPARATION

A. Clean surfaces thoroughly prior to installation.

B. Prepare surfaces using the methods recommended by the manufacturer for achieving the best result for the substrate under the project conditions.

3.03 INSTALLATION

A. Install in accordance with manufacturer's instructions, with shelf surfaces level.

B. Cap exposed ends of cut wires.

C. Install back clips, end clips at side walls, and support braces at open ends. Install intermediate support braces as recommended by manufacturer.

D. Mounting Heights: As indicatd on drawings.

3.04 CLEANING

A. Clean soiled surfaces after installation.

3.05 PROTECTION

A. Protect installed work from damage.

B. Touch-up, repair, or replace damaged products before Substantial Completion in a manner that eliminates evidence of replacement.

END OF SECTION

Williams Blackstock Architects
2204 1st Avenue South, Suite 200
Birmingham, AL 35233

March 17, 2020

Reference: Highway 280 Shelby County Services Building (WBA project 19-040.00)

The following is prior approval request for division 23 equipment. We request your review of the following:

232113.13 Underground Hydronic Piping – Energy Task Force Type EMT
232116 2.2 B. and C. Calibrated-Orifice Balancing Valves – Griswold Controls QuickSet
232116 2.3 C. Bladder Type Expansion Tanks – Wheatley Model BDT

If you have any questions, please contact me. Thank you for your consideration.

Best regards,

Brad Moore
Office: 205-428-2326

ETF WEST LLC
Division of Energy Task Force LLC
Pre-insulated pipe
7700 W Olive Ave - Peoria, AZ - 85345 - 623-878-4377 - 623-878-6683

ETF-MT Product Specification

Pre-insulated piping system designed for above ground or direct buried Chilled Water, Hot Water and all other 30˚ to 250˚ medium temperature systems.

Carrier Pipe:	Schedule 40 A53B ERW Steel.
Insulation:	Polyurethane foam: K Factor 0.14, Density 2.0 to 3.0 PCF, 90-95% closed cell conforming to mil spec –1-24172 and ASTM-C-591 completely filling the annular space between carrier pipe and jacket. Maximum service temperature of 250˚
Jacketing Material:	High Density Polyethylene (HDPE) casing Type III, Category 5, Class C conforming to ASTM D-1248 or as specified. For jacket thickness see attached schedule
End Seal:	Mastic factory applied to insulation ends.
Insulation of Straight Joints:	Prior to joining carrier pipe an HDPE sleeve is slid onto jacketing on either side of joint. After welding and hydro testing, the HDPE sleeve is slid in place and sealed with heat shrink tape. Polyurethane foam is then mixed and poured into the annular space and sealed watertight.
Fittings:	All fittings are Pre-fabricated and Pre-insulated by ETF West LLC
Backfilling:	Underground systems shall be buried in a trench of not less than 24 inches deeper than the top of the pipe jacket and not less than 18 inches wider than the combined O.D. of all piping systems. Backfill should be tamped compactly in place. No rock shall be used in the first foot of the backfill. To meet H-20 highway loadings, there must be a minimum of 24 inches from top of jacket to grade of the compacted fill.

ETF WEST LLC
Division of Energy Task Force LLC
Pre-insulated pipe
7700 W Olive Ave - Peoria, AZ - 85345 - 623-878-4377 - 623-878-6683

Table 1: Specified Carrier Pipe / HDPE Jacket

Nominal Pipe Size	Minimum Insulation Thickness	Nominal Jacket Size	Nominal Jacket Size
½”	1.83	4.50	150 mils
¾”	1.73	4.50	150 mils
1”	1.59	4.50	150 mils
1 ¼”	1.42	4.50	150 mils
1 ½”	1.30	4.50	150 mils
2”	2.13	6.63	150 mils
2 ½”	1.88	6.63	150 mils
3”	1.57	6.63	150 mils
4”	1.80	8.00	175 mils
5”	2.22	10.00	175 mils
6”	1.69	10.00	175 mils
8”	1.90	12.43	175 mils
10”	1.66	14.06	175 mils
12”	1.56	15.87	175 mils
14”	1.92	17.83	200 mils
16”	1.90	19.80	200 mils
18”	1.95	22.17	225 mils
20”	1.85	24.00	250 mils
24”	1.85	28.07	275 mils
30”	2.85	36.00	275 mils

ETF LLC WARRANTY

ETF LLC warrants its products only to the extent that it will replace those proved to have manufactured defects, within a one-year period from date of delivery. ETF must be provided an opportunity to inspect an alleged defective product and the installation application. This warranty does not provide for the expenses incurred for removal, re-installation or consequential damages arising from the defective material. There is no warranty other than that described above, and no one is authorized to issue any other warranty related to ETF LLC products.

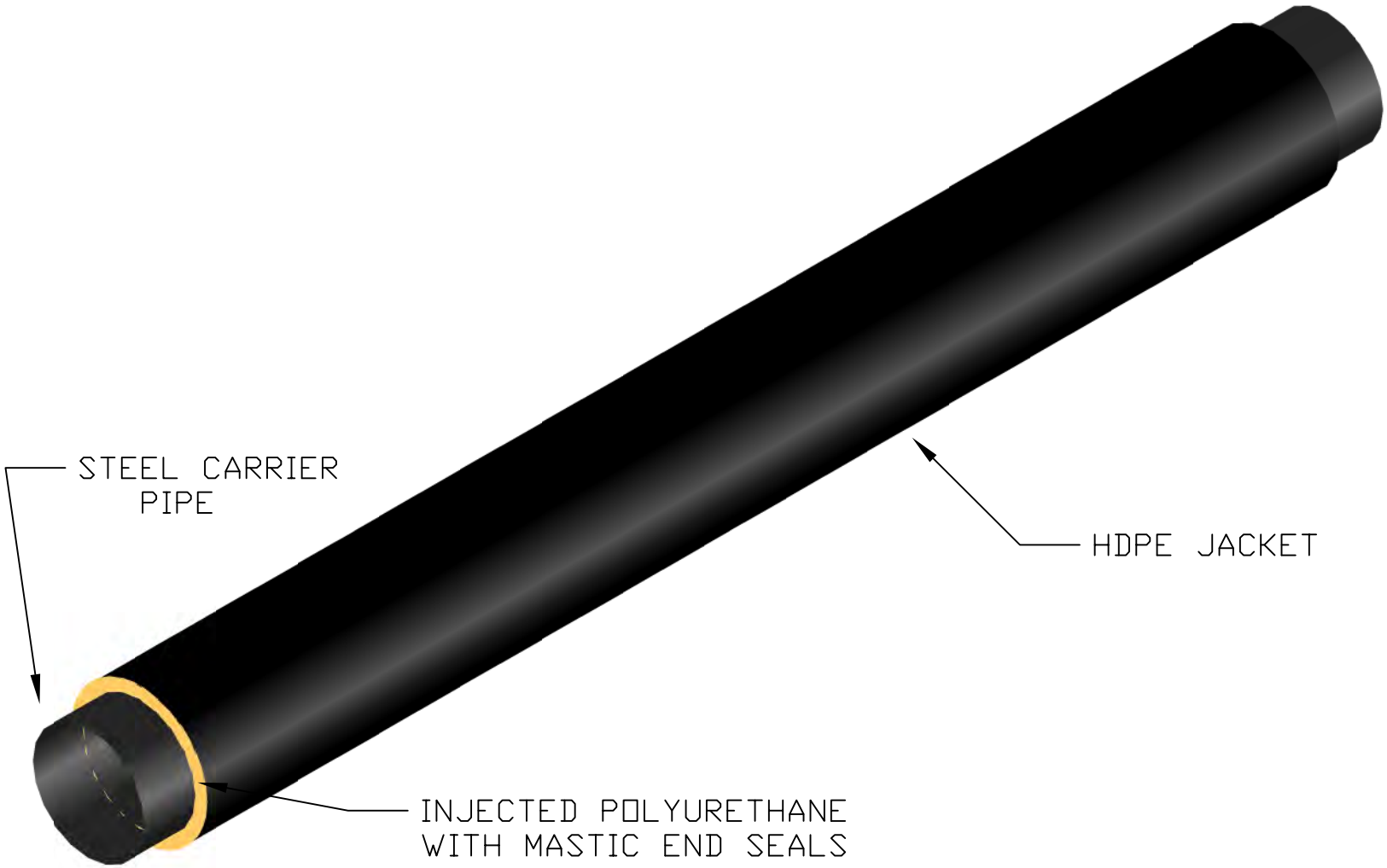

ETF WEST LLC
PRE-INSULATED PIPE

7700 W OLIVE AVE - PEORIA, AZ 85345 - 407-523-3770 - 407-523-3722

SCALE NTS	STEEL X HDPE JACKET	DRAWN BY LG
DATE 4/22/16		DWG #

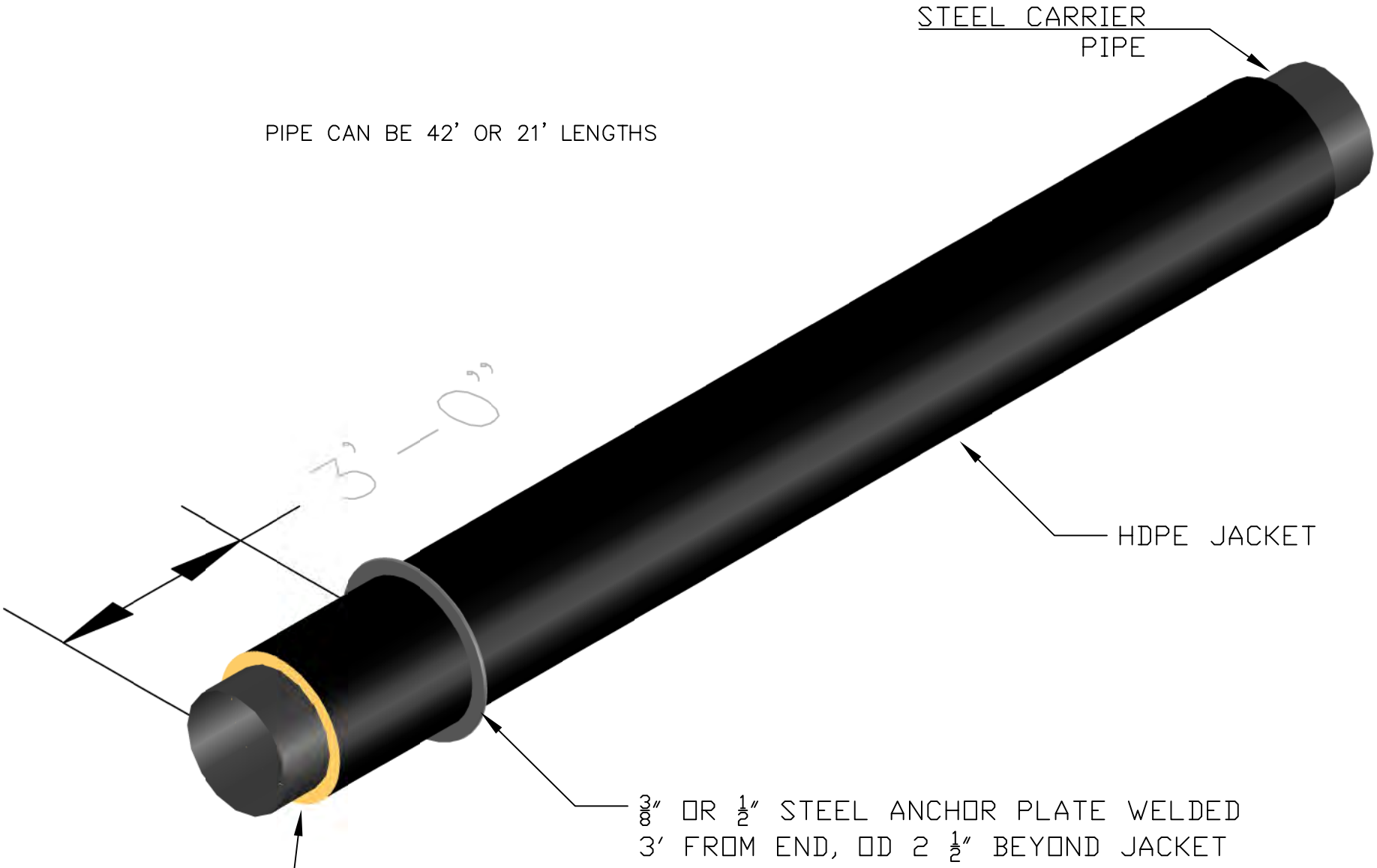

ETF WEST LLC
PRE-INSULATED PIPE
7700 W OLIVE AVE - PEORIA, AZ 85345 - 407-523-3770 - 407-523-3722

SCALE NTS	STEEL X HDPE JACKET	DRAWN BY LG
DATE 4/22/16		DWG #

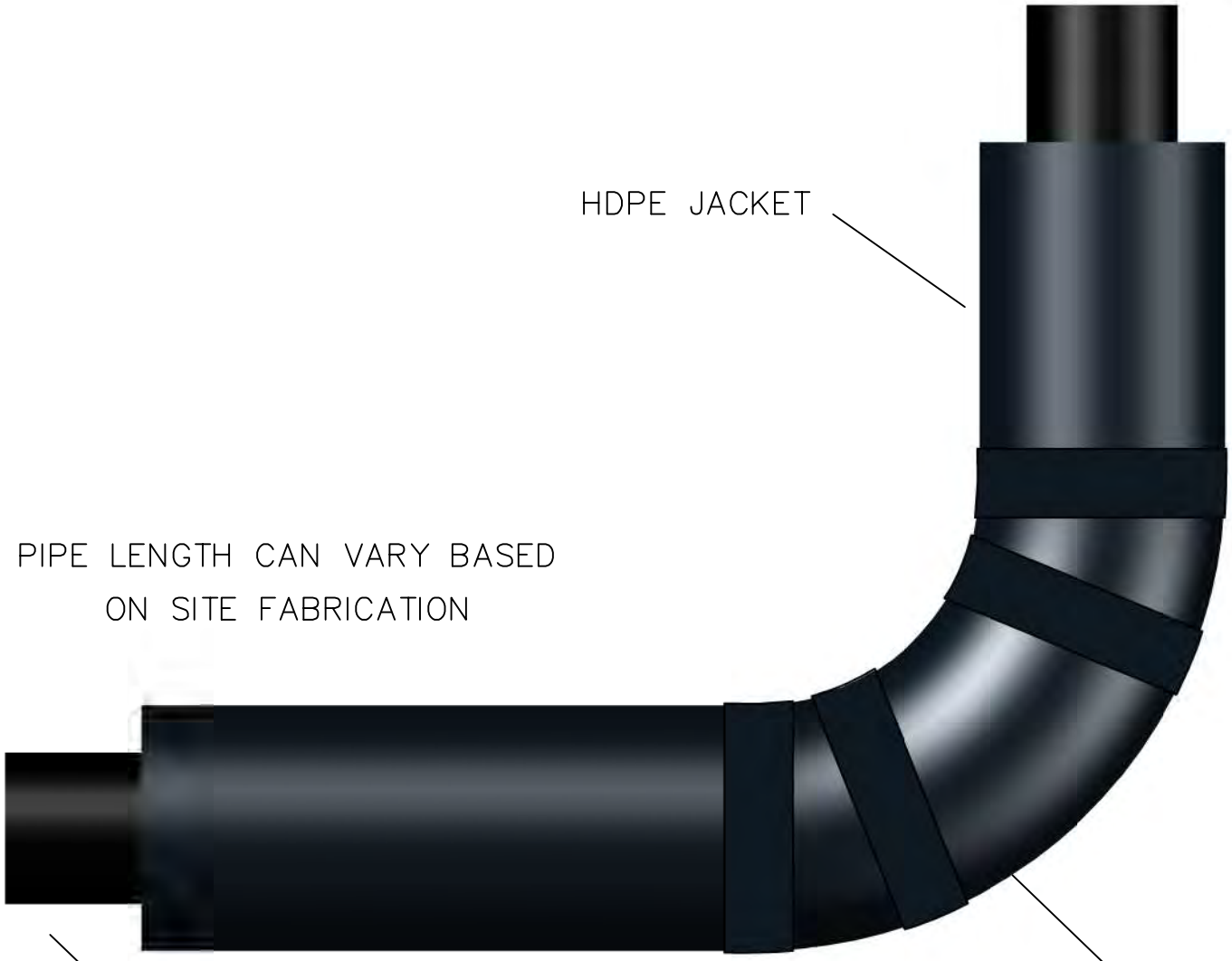

ETF WEST LLC
PRE-INSULATED PIPE
7700 WEST OLIVE AVE - PEORIA, AZ 85345 - 623-878-4377 - 623-878-6683

SCALE NTS	PRE–INSULATED 90	DRAWN BY LG
DATE 8/2/04		DWG #

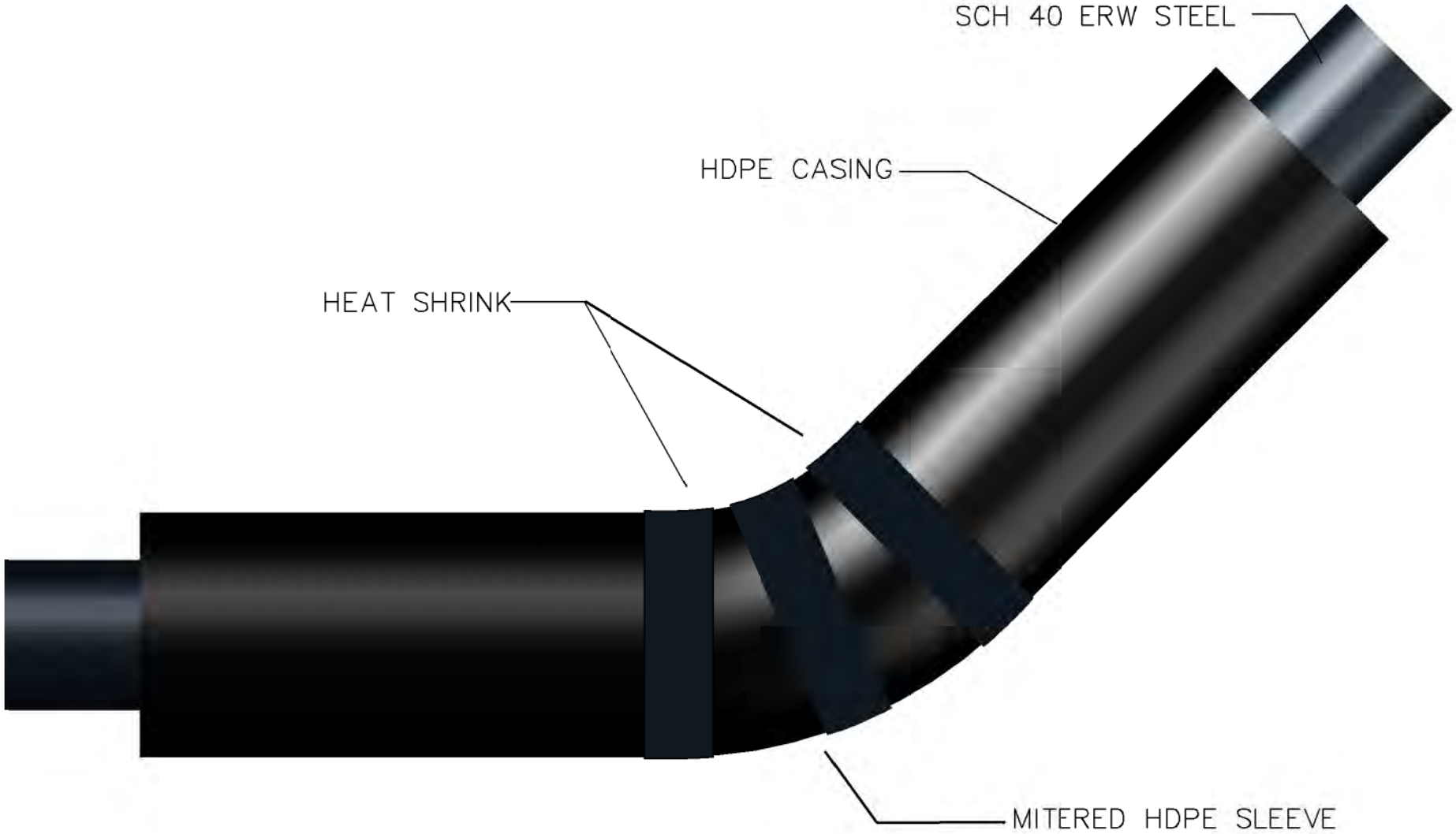

ETF WEST LLC
PRE-INSULATED PIPE

7700 WEST OLIVE AVE - PEORIA, AZ 85345 - 407-523-3770 - 407-523-3722

SCALE NTS	PREFABRICATED 45 DEGREE ELBOW	DRAWN BY LG
DATE 8/2/04		DWG #

ETF WEST LLC
PRE-INSULATED PIPE

7700 WEST OLIVE AVE - PEORIA, AZ 85345 - 623-878-4377 - 623-878-6683

SCALE NTS	PREFABRICATED CROSSOVER TEE	DRAWN BY LG
DATE 8/2/04		DWG #

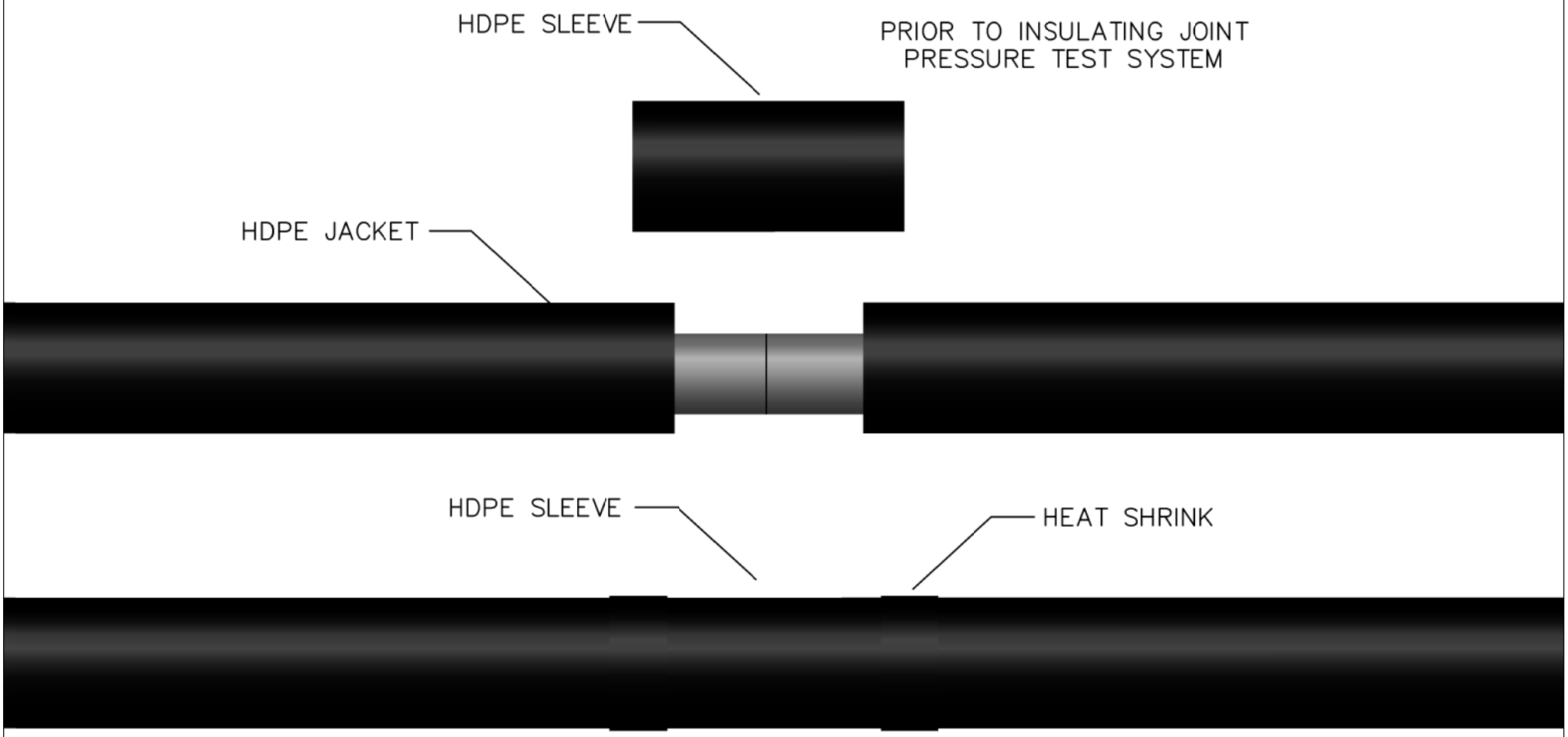

COVER JOINT WITH HDPE SLEEVE
WRAP SEAMS WITH HEAT SHRINK TAPE
INSULATE JOINT WITH POUR FOAM

ETF WEST LLC
PRE-INSULATED PIPE
7700 W OLIVE AVE - PEORIA, AZ 85345 - 407-523-3770 - 407-523-3722

SCALE NTS	FIELD JOINT DETAIL	DRAWN BY LG
DATE 8/2/04		DWG #

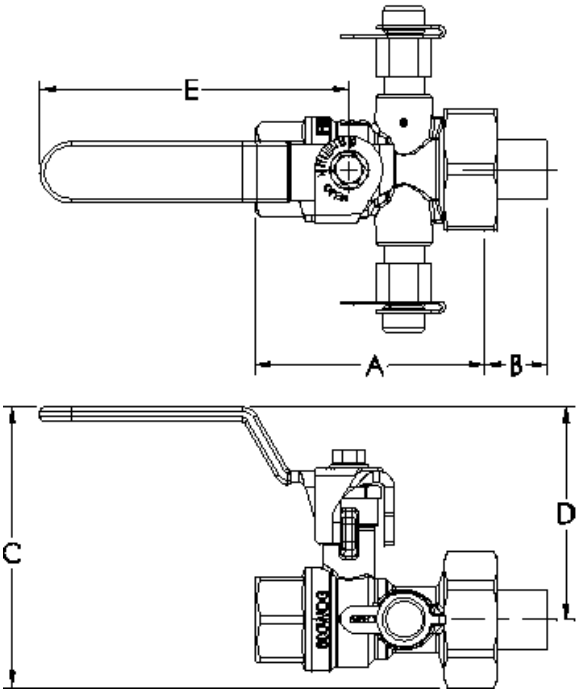

SPECIFICATIONS

PSI/Temperature Rating:	600 WOG 400 PSI / 250°F
Flow Elements:	Venturi: Brass
Body Material:	Forged Brass ASTM B283-06
End Connections:	Brass – NPT, Sweat or QuickPress[1]
Ball Valve Seals:	Teflon
Union Seal:	EPDM O-ring
Ball Valve:	Nickel-plated brass ball, full port Optional: Stainless steel ball
Body Tappings[2]:	Two Combination P/T Test Valve and Manual Air Vent (CPTA)
Field Repairable Stem:	Dual Teflon seals and EPDM O-ring
Handle:	Memory Stop with graduated markings
Assembly:	Valve comes fully assembled
Installation:	Straight sections of piping upstream and downstream of the QuickSet aren't necessary for proper operation
Options:	Extension Option

FLOW RATES (+/-1%[3])

OUTLET SIZE	MODEL NO.	FLOW GPM[(4)] AT 4 FT/SEC	Cv[(5)]	GPM RANGE FOR 5"–100" W.C. ΔP (SET W/100" GAUGE)	GPM RANGE FOR 5"–300" W.C. ΔP (SET W/300" GAUGE)
1/2", 3/4"	QS0	3.8	0.39	0.15 – 0.67	0.15 – 1.16
			1.1	0.3 – 1.4	0.3 – 2.4
			2.5	0.6 – 2.8	0.6 – 4.6
			4.2	1.2 – 5.4	1.2 – 9.4
3/4"L	QS1	6.7	0.9	0.3 – 1.4	0.3 – 2.5
			1.9	0.6 – 2.8	0.6 – 4.9
			3.9	1.3 – 5.6	1.3 – 9.7
			7.0	2.6 – 11.5	2.6 –19.9
1"	QS1	10.8	1.8	0.6 – 2.8	0.6 – 5.0
			3.8	1.3 – 5.6	1.3 – 9.7
			7.6	2.6 – 11.5	2.6 –19.9
			12.2	3.9 – 17.3	3.9 – 30.0
1-1/4"	QS2	18.7	10.0	3.4 – 15.0	3.4 – 26.2
			21.8	7.2 – 32.3	7.2 – 55.9
1-1/2"	QS2	25.4	22.1	7.4 – 33.0	7.4 – 57.2
			54.7	13.9 – 62.0	13.9 – 107.4
2"	QS3	41.9	65.2[6]	21.6 – 96.5	21.6 – 167.1
			105.2	21.6 – 96.5	21.6 – 167.1

NOTES

[1] QuickPress is available on ½" to 1" valves. Connections are compatible with popular press tools and are rated for maximum 200 PSI.
[2] Body Tappings for accessories are a leak proof metal to metal seal and do not require pipe dope or tape. Tape or dope should not be used.
[3] Accuracy is for venturi portion of valve only. Pressure readability is dependent on accuracy of gauge.
[4] The generally accepted upper limit as recommended by ASHRAE to prevent pipe noise is 4 ft/sec.
[5] Cv's are used to calculate the permanent pressure drop. PSID=(Flow/Cv)^2. Use the Flow Curve for flow measurement.
[6] 65.2 Cv includes an optimizer insert in the ball.

Replaces form F-4006 and F-4326 3/18

This specification © 2018 Griswold Controls F-5411H

2803 Barranca Parkway, Irvine, CA 92606
(949) 559-6000 Fax (949) 559-6088
www.GriswoldControls.com

GRISWOLD CONTROLS®

DIMENSIONS & WEIGHTS (NOMINAL)

SIZE	A - FIXED END CONNECTION		B - UNION END CONNECTION[7]						C	D	E	WEIGHT (LBS.)
	FNPT	SWT	FNPT		MNPT		SWT					
1/2"	2.6	2.5	1/2":1.0	3/4":N/A[8]	1/2":1.0	3/4":1.2	3/8",1/2":0.8	3/4":1.1	3.0	1.5	3.7	0.7
3/4"	2.6	3.2										
3/4"L	3.0	3.1	1/2",3/4":1.0	1":N/A[8]	1/2"-3/4":1.0	1":1.4	3/8",3/4": 1.0	1/2":0.7 1":1.3	3.8	2.6	3.7	1.0
1"	3.2	3.4							4.0	2.9	5.0	1.5
1-1/4"	3.9	4.1	1",1-1/4",1-1/2":1.7		1",1-1/4",1-1/2":1.7		1",1-1/4":1.7	1-1/2":1.4	4.3	3.1	5.0	3.5
1-1/2"	4.4	4.6							5.3	3.5	5.5	4.5
2"	5.1	5.5	1-1/2":1.6	2": N/A[8]	1-1/2", 2":1.6		1-1/2":1.7	2":1.6	5.3	4.0	5.5	6.9

For QuickPress connections add 3.1" (1/2", 1/2"L) 3.6" (3/4", 3/4"L), 4.1" (1") to the FNPT length (A) listed for a valve.
All dimensions are for planning purposes only, contact factory for actual measurements at time of order.

MODEL NUMBER SELECTION

Q S

Select a Housing Size (0=1/2"-3/4", 1=3/4"L-1", 2=1-1/4"-1-1/2", 3=2")

Select a Cv Factor (A=0.39, B=0.9 or 1.1, C=1.8, 1.9 or 2.5, D=3.8, 3.9 or 4.2, E=7.0, F=7.6, G=12.2, H=10.0, I=21.8, J=22.1, N=54.7, M=65.2, P=105.2)

Select Ball and Stem Package (P=Plated Ball, S=SS Ball and Stem)

Extension Option[9] (0=No, 1=1-1/2", 2=2")

T=Optional 3"x3" Aluminum Hanging I.D. Tag

	FIXED END OR UNION END[10] (No Union Tailpiece=Z)			UNION END ONLY[10]
Valve	Female Threaded	Female Sweat	QuickPress	Male Threaded
QS0	1/2"=E, 3/4"=F[11]	3/8"=K[12/13], 1/2"=L, 3/4"=M	1/2"=2[13], 3/4"=3	1/2"=H, 3/4"=I
QS1	1/2"=E[13], 3/4"=F, 1"=G[11]	3/8"=K[12/13], 1/2"=L[12/13], 3/4"=M, 1"=N	1/2"=2[13], 3/4"=3, 1"=1	1/2"=H[13], 3/4"=I, 1"=J
QS2 (1-1/4")	1"=G[12], 1-1/4"=P, 1-1/2"=Q	1"=N[12], 1-1/4"=K, 1-1/2"=W	N/A	1/2"=H[13], 3/4"=I[13], 1"=J, 1-1/4"=S, 1-1/2"=T
QS2 (1-1/2")	1"=G[12/13], 1-1/4"=P, 1-1/2"=Q	1"=N[12/13],1-1/4"=K, 1-1/2"=W	N/A	1"=J[13], 1-1/4"=S, 1-1/2"=T
QS3	1-1/2"=Q[12], 2"=R[11]	1-1/2"=W[12], 2"=Y	N/A	1-1/2"=T, 2"=U

Size reductions to the ATC of more than two line sizes may affect pressure signal of venturi depending on ATC configuration.

NOTES

[7] For overall length, add union end connection length to body length.
[8] Tailpiece is not available for this size. Male tailpiece used with coupling.
[9] Extension Option includes handle cover and accessory extensions for either 1-1/2" or 2" insulation.
[10] Select the Fixed End First and the Union End Second.
[11] Tailpiece is not available for this size. Male tailpiece used with coupling.
[12] Fixed end not available for this size. Union tailpiece only.
[13] This tailpiece has Cv limitations. 3/8" tailpiece is not compatible with Cv of 4.2, 7.0, 7.6, 12.2; 1/2" tailpiece is not compatible with Cv of 12.2, 21.8, 22.1, 54.7; 3/4" tailpiece is not compatible with Cv of 21.8, 22.1, 54.7; 1" tailpiece is not compatible with Cv of 54.7 or 105.2; 1-1/4" tailpiece is not compatible with Cv of 105.2.

Replaces form F-4006 and F-4326 3/18

This specification © 2018 Griswold Controls F-5411H

2803 Barranca Parkway, Irvine, CA 92606
(949) 559-6000 Fax (949) 559-6088
www.GriswoldControls.com

GRISWOLD CONTROLS®

Flanged End Metering Station (2-1/2"–20")

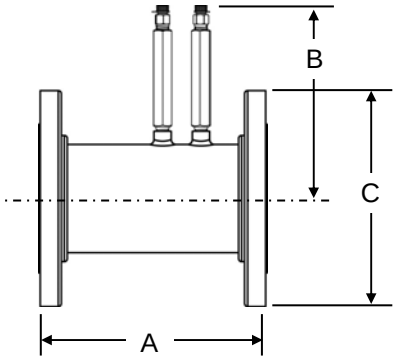

SPECIFICATIONS:

PSI/Temperature Rating	
Metering Station:	240 PSI/250º F
QuickSet:	175 PSI (14"-18": 150 PSI) /250º F
Low Loss Venturi:	Carbon Steel with Piezo-Ring to average low signal pickup.
Body Material:	Carbon Steel SA-53 Grade B.
Butterfly Valve[1]:	Bronze disk, 400 series S.S. stem.
End Connections:	Steel flanges ANSI B16.5-RF Class 150
Assembly:	Valve comes fully assembled.
Installation:	No straight-run is necessary for normal operation. Consult chart (F-4439) for exact Flow Constant and Permanent Pressure Drop calculations.

Flanged End QuickSet with Handle Butterfly Valve (2-1/2"–6")

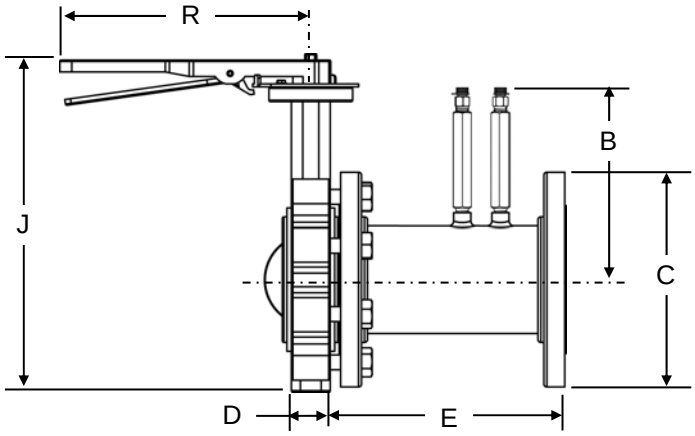

Gear/Hand Wheel Butterfly Valve (8"–18")

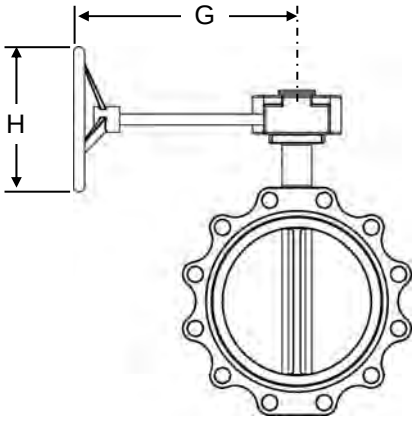

FLOW RATES (+/-1%[2])

LINE SIZE	MODEL NO.	Cv Metering Station[3]	Cv Quickset[3]	GPM RANGE FOR 5"-100" [4] W.C. ΔP (SET W/100" GAUGE)	GPM RANGE FOR 5"-300" W.C. ΔP (SET W/300" GAUGE)
2-1/2"	3QFM_	171	135	19 – 87	19 – 151
3"	3QFN_	269	201	32 - 147	32 – 255
4"	3QFP_	580	417	58 – 260	58 – 451
5"	3QFQ_	800	630	80 – 372	80 – 645
6"	3QFR_	1250	980	140 – 624	140 – 1075
8"	3QFS_	2100	1745	260 – 1180	260 – 2045
10"	3QFT_	4000	3201	375 – 1610	375 – 2790
12"	3QFU_	5700	4690	600 – 2790	600 – 4820
14"	3QFV_	7300	6225	775 – 3420	775 – 5940
16"	3QFW_	9600	8283	1250 – 5525	1250 – 9575
18"	3QFX_	14500	12057	1650 – 7405	1650 – 12830
20"[5]	3QFY_	26400	19950	2246 – 10071	22460 - 17448

NOTES

[1] Butterfly valve is standard on QuickSet only.

[2] Accuracy is based on Griswold's manufacturing tolerances. Accuracy for determining flowrate will be affected by the accuracy of the meter used to set the valve.

[3] Cv's are used to calculate permanent pressure drop. PSID=(Flow/Cv)^2. Consult chart F-4439 for flow measurement.

[4] Not all gages/meters can accurately show a 5" signal. Readability is dependent on quality of the meter. Digital gages can read below 1".

[5] 20" is only available as a Metering Station.

Replaces form F-5407C 1/16

This specification © 2016 Griswold Controls F-4407F

2803 Barranca Parkway, Irvine, CA 92606
(949) 559-6000 Fax (949) 559-6088
www.GriswoldControls.com

GRISWOLD CONTROLS

DIMENSIONS & WEIGHTS FOR METERING STATION (NOMINAL)

LINE SIZE	A	B	C	WEIGHT (LBS.)
2-1/2"	6.3	7.3	7.0	17.9
3"	6.8	7.6	7.5	21.9
4"	8.4	8.0	9.0	31.5
5"	10.3	8.6	10.0	40.0
6"	10.8	9.1	11.0	51.7
8"	12.8	10.1	13.5	86.5
10"	16.0	11.2	16.0	130.6
12"	16.8	12.2	19.0	191.1
14"	17.0	12.8	21.0	244.7
16"	18.0	13.8	23.5	300.1
18"	17.3	14.8	25.0	326.5
20”	20.9	14.2	27.5	TBD

DIMENSIONS & WEIGHTS FOR QUICKSET (NOMINAL)

LINE SIZE	B	C	D	E	G	H	J	R HANDLE	WEIGHT (LBS.)	
									W/ HANDLE	W/GEAR WHEEL
2-1/2"	7.3	7.0	1.8	6.3	N/A	N/A	11.6	10.5	24.9	N/A
3"	7.6	7.5	1.8	6.8	N/A	N/A	12.1	10.5	29.4	N/A
4"	8.0	9.0	2.0	8.4	N/A	N/A	13.6	10.5	43.0	N/A
5"	8.6	10.0	2.1	10.3	N/A	N/A	14.6	10.5	54.0	N/A
6"	9.1	11.0	2.3	11.8	N/A	N/A	15.6	10.5	70.3	N/A
8"	10.1	13.5	2.4	15.3	N/A	12.0	18.9	N/A	N/A	126.5
10"	11.2	16.0	2.6	18.3	9.5	12.0	21.3	N/A	N/A	187.3
12"	12.2	19.0	3.0	21.8	9.5	12.0	24.6	N/A	N/A	280.7
14”	12.8	21.0	3.0	24.3	9.5	12.0	26.8	N/A	N/A	378.3
16"	13.8	23.5	4.0	27.8	15.0	16.0	30.0	N/A	N/A	486.7
18"	14.8	25.0	4.5	32.0	15.0	16.0	31.6	N/A	N/A	614.2

MODEL NUMBER SELECTION[6]

3 Q F

Select a Size: M=2.5", N=3", P=4", Q=5" R=6", S=8", T=10", U=12", V=14", W=16", X=18", Y=20"

"0" for Metering Station "Y" for QuickSet with Butterfly Valve

Tag: 0=Standard, T=Hanging Tag

NOTES

[6] Model no. and flow rate are indicated on label affixed to body.

Replaces form F-5407C 1/16

This specification © 2016 Griswold Controls F-4407F

2803 Barranca Parkway, Irvine, CA 92606
(949) 559-6000 Fax (949) 559-6088
www.GriswoldControls.com

GRISWOLD CONTROLS®

American WHEATLEY HVAC PRODUCTS®

BDT Series
ASME "Multi-Purpose" Expansion Tank

Features:

- Constructed in accordance with ASME Section VIII, Division I, Latest Edition
- Stainless Steel System Connection
- EPDM Bladder
- Full Acceptance Bladder Design / Replaceable
- Factory Air Charged to 12 P.S.I.
- Maximum Temperature 280°F Intermittent
- Constructed of NSF 61 Compliant Materials
- Primed Exterior

Optional Features:

- Higher working pressures available
- Top entry
- "Bulls Eye" sight glass
- Seismic mounting (clips or legs)
- Painted Exterior, Epoxy Coatings

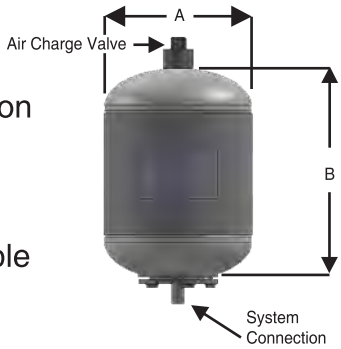

BDT-006 & BDT-009

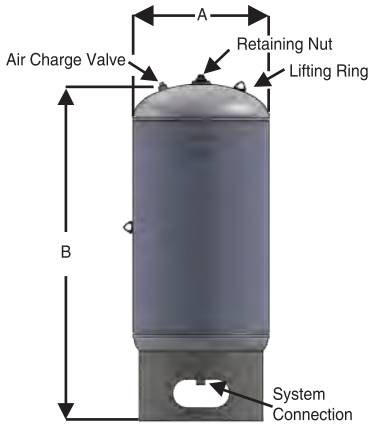

BDT-040 THRU BDT-211

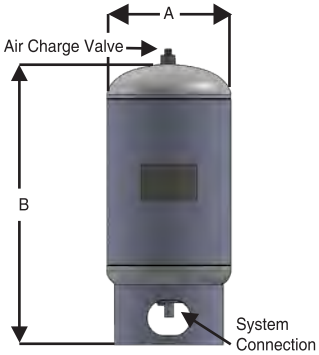

BDT-013, BDT-016 & BDT-026

PART NUMBER	ACCEPTANCE VOLUME	DIAMETER A (IN.)	HEIGHT B (IN.)	SYSTEM CONNECT (IN.)	WEIGHT	WORKING PRESSURE
BDT-006	6 GALLON	12	12	3/4"	24	150 PSI
BDT-009	9 GALLON	12	17	3/4"	28	150 PSI
BDT-013	13 GALLON	14	28	3/4"	50	150 PSI
BDT-016	16 GALLON	14	32	3/4'	65	150 PSI
BDT-026	26 GALLON	16	40	3/4"	98	150 PSI
BDT-040	40 GALLON	20	41	1"	140	150 PSI
BDT-060	60 GALLON	24	48	1 1/2"	220	150 PSI
BDT-080	80 GALLON	24	50	1 1/2"	235	150 PSI
BDT-112	112 GALLON	30	52	1 1/2"	273	150 PSI
BDT-135	135 GALLON	30	59	1 1/2"	340	150 PSI
BDT-162	162 GALLON	30	61	1 1/2"	360	150 PSI
BDT-185	185 GALLON	30	80	1 1/2"	545	200 PSI
BDT-211	211 GALLON	32	71	1 1/2"	480	150 PSI

All packaging materials, thread protectors, plastic plugs and caps must be removed before installation.
Dimensions are subject to change without notice, please confirm actual dimensions with factory at time of order.

JOB NAME _____
LOCATION _____
_____
_____
CONTRACTOR _____
CONTRACTOR P.O. NO. _____

ITEMS	QUANTITY

American WHEATLEY HVAC PRODUCTS®
A GFP COMPANY
2701 W. Concord Street
Broken Arrow, OK 74012
Toll Free: 866-204-5229
PH: 918-317-0401
FAX: 918-317-0407
www.wheatleyhvac.com
e-mail: sales@globalflowproducts.com

USE:

Designed to absorb expansion of fluids in typical hydronic systems. The BDT Tank is designed for pressure boost systems as well as typical cooling and heating applications. Bladder material is suitable for hot water applications. Installation of the tank will help eliminate constant pump use, prolonging pump life and unnecessary blowing of relief valves.

Specifications:

Furnish and install and shown on plans, American Wheatley BDT series, full acceptance expansion tank. Tank shall be constructed of carbon steel in accordance with ASME Section VIII, Division 1, latest edition. Tank shall incorporate a removable and replaceable heavy duty EPDM bladder. Tank shall be supplied with 12 psi factory air charge. Tanks shall be supplied on standard base ring unless otherwise specified. Tanks shall be constructed and ASME stamped for 150 psi working pressure at 240°F. Tanks shall be supplied with exterior high grade red oxide primer finish. Vertical or horizontal installation is acceptable. Non-replaceable diaphragm type tanks are not acceptable.

Typical Piping Details

With Bladder Type Tanks (BDT Series)

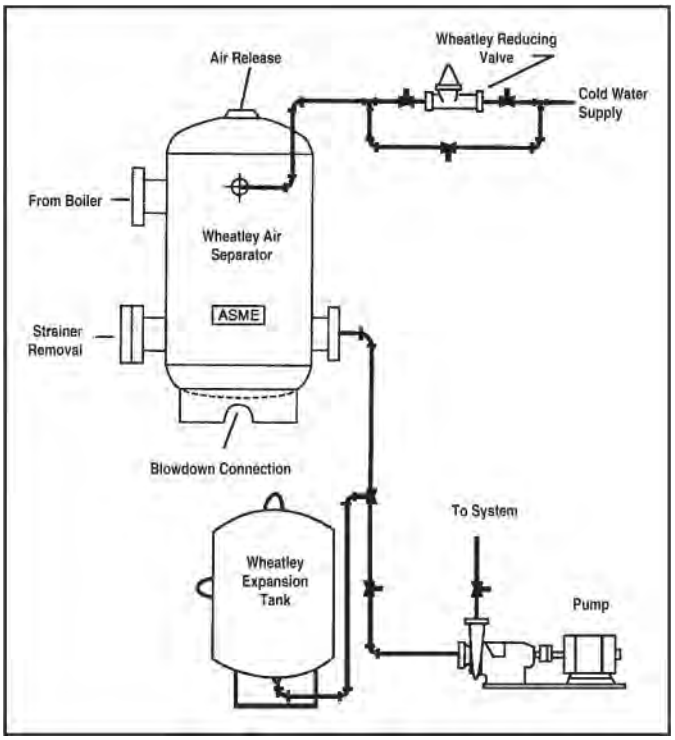

2701 W. Concord Street, Broken Arrow, OK 74012
Toll Free: 866-204-5229 PH: 918-317-0401
FAX: 918-317-0407
www.wheatleyhvac.com e-mail: sales@globalflowproducts.com

SUBSTITUTION REQUEST

Project: Shelby Couth Services Building

Birmingham, AL

To: Williams Blackstock

Attn:

Re: Request for Substitution for Computer Room Air Conditioners

Substitution Request Number:

From: Paul Walker-Climate Control Systems

Date: 3-17-20

A/E Project No.:

Contract For:

Specification Title: Computer Room Air Conditioner

Description: Computer Room Air Conditioner

Section: Section 238123

Page and Paragraph:

Proposed Substitution: Compu-Aire

Trade Name: Compu-Aire

Manufacturer: Compu-Aire

Model No.:

Mfg. Address 8167 Byron Rd. City, State, zip: Whittier, CA 90606 Phone: 562-945-8971

Attached data includes product description, specifications, drawings, photographs, and performance and test data adequate for evaluation of the request; applicable portions of the date are clearly identified.

Attached data also includes a description of changes to the Contract Documents that the proposed substitution will require for its proper installation.

The Undersigned certifies:

- Proposed substitution has been fully investigated and determined to be equal or superior in all respects to specified product.
- Same warranty will be furnished for proposed substitution as for specified product.
- Same maintenance service and source of replacement parts, as applicable, is available.
- Proposed substitution will have no adverse effect on other trades and will not affect or delay progress schedule.
- Proposed substitution does not affect dimensions and functional clearances.
- Payment will be made for changes to building design, including A/E design, detailing, and construction costs caused by the substitution.

Submitted by: Paul Walker

Signed by: Paul Walker

Firm: Climate Control Systems

Address: 710 Maple St, Birmingham, AL 35210

Telephone: 205-956-9220 ext 111 e-mail address: pwalker@ccsi-se.com

---

A/E's REVIEW AND ACTION

- [X] Substitution approved - Make submittals in accordance with Specifications, Substitution Procedures.
- [ ] Substitution approved as noted - Make submittals in accordance with Specifications Substitution Procedures.
- [ ] Substitution rejected - Use specified materials.
- [ ] Substitution Request received too late - Use specified materials.

Signed by: Tom Hattemer

Date: 03/20/2020

Supporting Data Attached: [X] Drawings [X] Product Data [ ] Samples [ ] Tests [ ] Reports [ ]

INCOMPLETE INFORMATION WILL BE GROUNDS FOR REJECTION

COMPU-AIRE INC.

Specialized Environmental Air Conditioning Systems

FLEXIBLE & INNOVATIVE

COOLING SOLUTIONS

ISO 9001: 2008
CERTIFIED

Flexible & Innovative

Compu-Aire Inc. offers a variety of high performance precision cooling systems that can adapt to your application needs.

With today's rapidly changing technology, spot heating and cooling, humidity control, and air filtration are just a few of the basic specifications required to maintain temperature critical facilities, no matter how big or small the spaces are.

Keeping these needs in mind, Compu-Aire Inc. specially designed units are manufactured to meet the customer's requirements, without sacrificing efficiency and quality. Compu-Aire Inc's. attention to detail and customization are just a couple of the personalized features offered.

We work with you to design HVAC systems that can save you money while providing optimal overall system performance and occupant comfort. Our engineered flexibility allows you to fine tune your HVAC system to meet the specific requirements of your application, resulting in lower installed and operating costs, high energy efficiency, quiet operation, superior indoor air quality (IAQ) and low cost maintenance and service.

In Row Systems

The Compu-Aire Inc. Ayan IV and Ayan Nano are the latest additions to Compu-Aire Inc. product family. These new units are designed to create an efficient and modern cooling system, without sacrificing space and specifications. These units have been designed to be green friendly, by using a high efficiency scroll compressor with EC Plug fans, making it the latest innovation for the customer's specific cooling needs.

The In Row Systems are designed as supplemental and to provide cooling in a horizontal direction, creating a new way to position the units. The In Row Systems can be positioned between the racks, creating a more even dissipation of extreme heat from the servers. The In Row Systems are the perfect choice for hot/cold aisle containment set up.

By creating a unit with horizontal cooling, this prevents the mixing of hot and cold air, creating a more efficient cooling unit. This allows the In Row Systems to run at its best capabilities, allowing for improved air conduction, since the cold air is transported through the side outlets, and throughout the entire facility.

Ayan IV

Product Features

- Split System
- EC Motors/Plug Fans
- Horizontal Air Flow
- Humidifier ◊
- Reheat ◊
- 2-8 Ton capabilities
- 24 inches wide
- Interfacing with the emerging protocols in the HVAC sector and based on industry standards.
- Touch screen graphical display
- pCO web ◊
- LonWORK protocol ◊
- BACnet Ethernet, BACnet network over TCP/IP and MS/TP

Ayan Nano

Product Features

- Compact design
- EC Motors/Plug Fans
- Horizontal Air Flow
- 2-4 Ton capabalities
- 12 inches wide
- pGD1 advance microprocessor
- pCO web ◊
- LonWORK protocol ◊
- BACnet Ethernet, BACnet network over TCP/IP and MS/TP

The pDG1 with graphical display allows complete management and is flexible and easy to customize.

◊ **optional feature**

Floor Mounted Systems

High performance, sensitive electronic equipment requires precise, reliable control of room temperature, humidity, and air flow for optimum performance. Compu-Aire Inc. floor mount systems have been meeting this challenge to provide a stable environment since 1980. Compu-Aire Inc. floor mount systems product line is made up of optimal features, energy efficient premium products that are available in sizes and configurations to suit any application, even corrosive industrial process environments. It is available in capacities ranging from 2 to 60 tons in compressor systems or 2 to 70 tons in chilled water systems.

System 2100

Product Features

- Precise and smart advanced microprocessor with graphical touch screen display
- Air, water, and glycol cooled systems
- Downflow and Upflow configurations
- Capacity from 6-60 tons
- Isolated compressor compartment
- On-demand dehumidification
- Electric reheat
- Steam generating modulating humidifier-canister type
- MERV 8 Filters
- Free Cooling "EM" and Dual Cooling "C+" Systems available ◊
- Dual high efficiency scroll compressors
- Environmental friendly refrigerants R-407C, R-134A, R-410A ◊
- Factory pre-piped, wired, and tested
- EC Plug fans with modulating air flow control ◊
- Air side economizer ◊
- Removable front and side panels for easy service access

System 2100 Kompact

Product Features

- Precise and smart advanced microprocessor with graphical touch screen display
- Air, water, and glycol cooled systems
- Downflow and Upflow configurations
- Capacity from 6-12 tons
- On-demand dehumidification
- Electric reheat
- Steam generating modulating humidifier-canister type
- Design for higher sensible heat
- Removable front and side panels with lift-off hinges for easy service access
- Heavy gauge tubular steel frame
- High efficiency scroll compressors
- Environmental friendly refrigerants R-407C, R-134A, R-410A ◊
- Factory pre-piped, wired, and tested
- EC Plug fans with modulating air flow control ◊
- Removable front and side panels for easy service access

System 2000 Chilled Water

Product Features

- Precise and smart advanced microprocessor with graphical touch screen display
- Upflow and Downflow models available
- Capacity from 6-70 tons
- Steam generating modulating humidifier-canister type
- Electric reheat
- On-demand dehumidification
- Designed for higher sensible heat ratio
- Removable front and side panels for easy service access
- Three way modulating valves
- "A" frame chilled water coils
- EC Plug fans with modulating air flow control ◊
- Air side economizer ◊

◊ **optional feature**

Floor Mounted Systems

Compu-Kool III

Product Features

- More cooling with smaller foot print
- Precise and smart advanced microprocessor with graphical touch screen display
- Air, water, glycol cooled and chilled water systems
- Free Cooling "EM" and Dual Cooling "C+" Systems available ◊
- Downflow and Upflow configurations
- Capacity from 2-6 tons
- On-demand dehumidification
- Electric reheat
- Choice of outdoor or indoor roof or ceiling mounted condensing unit
- Steam generating modulating humidifier canister type
- Design for higher sensible heat ratio
- Removable front and side panels for easy service access
- Heavy gauge tubular steel frame
- High efficiency scroll compressor
- Environmental friendly Refrigerant R-407C, R-134A, R-410A ◊
- Factory pre-piped, wired, and tested

Ceiling Mounted Systems

Recognizing the emerging trends toward smaller, more powerful hardware with increased cooling requirements, Compu-Aire Inc. designed ceiling/roof mount cooling systems with features specifically aimed at providing increased reliability, serviceability, and energy efficiency.

Available in capacities from 1.5 to 20 tons, Compu-Aire Inc. ceiling/roof mount systems can be configured in either free air discharge or ducted applications. With many possible configurations, there is a system available to fit the temperature and humidity control needs of any room. Installation is fast, operation is quiet, and maintenance is simple.

The cooling system is installed above a dropped ceiling or roof, saving floor space for your protected equipment. Ceiling/roof mount systems also offer the flexibility of configuration options such as ducting, various reheat options, free-cooling, and other features to allow the system to be tailored to the needs of your application.

Mini-Temp

Product Features

- Self-contained package ceiling mount systems
- Available on air cooled, water/glycol cooled or chilled water systems
- Capacity from 1.5 and 2 tons
- Installation: 2ft x 4ft ceiling tile
- Rugged cabinet construction, thermally and acoustically insulated cabinet
- Side access is made easy for servicing
- Single point electrical connection
- Air cooled models have a copper-tube, aluminum fin type condenser coil

Mini-Temp Plus

Product Features

- Ceiling mounted split system
- Available on air cooled, water/glycol cooled or chilled water systems
- Choice of outdoor or indoor roof or ceiling mounted condensing unit
- Available as ducted or non-ducted system
- Capacity from 1.5, 2, 3 and 5 tons

◊ **optional feature**

Maxi-Kool/Heat Pump /100% OSA Systems

Product Features

- Self-contained/split ducted ceiling/roof mounted system
- Available air, water, glycol cooled and chilled water systems
- Capacity from 1.5-20 tons
- Air cooled-heat pump
- Ducted system
- High energy efficiency
- High efficiency coil provided maximum coil to air heat transfer
- Electric reheat
- Steam generating humidifier modulating canister type
- Fully insulated cabinet
- High efficiency scroll compressors
- Side access panel
- Single point electrical connection
- Multi-stage operation
- Remote Advanced Microprocessor Controls

Roof Top Systems

Product Features

- Self-contained package roof mounted system
- Multiple duct configurations
- Air cooled, water/glycol cooled, chilled water system heat pump
- Capacity from 1.5-25 tons
- High efficiency coil provided maximum coil to air heat transfer
- High efficiency scroll compressors
- Fully insulated cabinet
- Single point electrical connection
- Remote advanced microprocessor controls
- Electric reheat
- Steam generating modulating humidifier-canister type
- Free Cooling "EM" and Dual Cooling "C+" Systems available ◊
- Air side economizer
- EC Plug fans with modulating air flow control ◊
- Digital scroll compressor ◊
- Modulation hot gas reheat ◊
- Double wall construction ◊

Optional EC Fan Technology available in selected Compu-Aire Inc. systems. The evaporator sections are configured for draw-thru air pattern to provide uniform air flow over the coil face area. Each fan is a cassette type complete with a variable speed high efficiency EC motor directly driven by the controller with 0-10 VDC output for precise air flow volume control.

◊ **optional feature**

Exterior Wall Mount Systems

Whether you need to cool a shelter, school, cabinet, or container, Compu-Aire Inc. builds a unit for your requirements. Compu-Aire Inc. has developed innovative air conditioners, specifically for the emerging telecommunications market since it has expanded and redesigned to meet the requirements of commercial modular and classroom markets.

Compu-Aire Inc. exterior wall mounted air conditioners are one of the most economical ways to provide heating, cooling, and ventilation. These exterior mounted units are built in a variety of styles and configurations.

Cellu-Kool

Product Features

- Self-contained
- Space Saving Design
- Units available in 1.5, 2, 3, 4,and 5 Ton Capacities
- Full length mounting brackets on sides and top
- 1”/1.5 lbs. insulation
- Manual adjustable fresh air intake damper
- Modulating economizer ◊
- High efficiency scroll compressor
- Thermal expansion valve control
- Stainless steel drain pan
- Electric Heat ◊
- Hot gas bypass ◊
- Low ambient fan cycling control to 0°F ambient
- Dry contacts for remote alarm
- EC Plug fan ◊

Console Systems

Specifically designed to provide precise temperature and humidity control for small to mid-size computer rooms or spot cooling in larger rooms, capacity can be matched to your sensitive electronics. Ideal for applications where people and sensitive electronics must occupy the same space, the Compu-Aire Inc. console system provides 1.5 to 5 tons of cooling capacity. It is designed to be installed against a wall inside the room. Some features of the console system include:

Compu-Mate

Product Features

- Compact design, requires minimal service access
- Self-contained or split system
- High sensible cooling capacity
- Two speed fan motor
- Capacity from 1.5, 2, 3, 4 to 5 tons
- DX – air, water, glycol cooled, and chilled water systems
- Floor mounted or wall mounted
- Choice of outdoor or indoor roof or ceiling mounted condensing unit
- 100% front service access
- Advanced microprocessor control
- Single DX circuit design with high efficiency scroll compressor

◊ **optional feature**

Compu-Aire Inc. 2200 + Series Control

Keeping the control in your hands

Compu-Aire Inc. has always focused special attention on simplicity of use, while at the same time fully exploiting the potential for flexibility and power offered by microprocessor technology.

Compu-Aire Inc. offers a diverse range of programmable controls, with state of the art user interfaces, including touch screen displays.

Compu-Aire Inc. 2200+ Series control provides a versatile approach to monitor the precise cooling and heating needs of your critical applications. With the latest technology available to the customer, we are able to provide reliable and flexible features to allow the customer to manage even the most intricate application.

Compu-Aire Inc. user friendly controllers support a variety of communications and protocols, including BacNet, LonWORKS, FTP, HTML, and Modbus.

Graphical Touch Screen Display

Included are various animated icons and non-proportional fonts in Unicode format and trend graphs. The touch screen display functions simplify setting the control parameters, allowing the customer easy access to the System 2200+ series controller.

Graphical status update with a touch of a button

Fan On

Demand for Heat

Demand for Cooling

Demand for Humidification

Demand for Dehumidification

H_2O *Excess Humidity Draining*

H_2O *Humidifier Active*

BMS Interface

Interact and monitor remotely with the pCO web card.

Compu-Aire Inc. advanced microprocessing control system provides access to our equipment through building management system (BMS) supporting industrial standard protocols including Modbus, BACnet, and LonWorks. This ensures easy access to the remote management of the unit via modem and internet.

Available Communications Options
Interfacing with the emerging protocols in the HVAC sector and based on industry standards supporting the following networks:
BACnet Over Ethernet
BACnet Over TCP/IP
BACnet MSTP
SNMP v1, v2, v3 networks with trap
Modbus
RS-485
LonWorks

BMS Communication protocols

Stand Alone Supervision Over pCO web

BMS Interface:
Our controllers have the capability to receive necessary sensor inputs from BMS and utilize it to control the equipment. The controls can monitor the BMS status and if BMS became offline, controller can seamlessly switch over to local sensors and set points to maintain your data center cooling demand.

pLAN Stand alone network

Stand alone supervision over web browser

pCO Web card interface provides:

- Unit status with virtual information
- Room temperature/humidity
- Current set points for temp/humidity
- Mode of operation
- Current status for vital components such as compressors humidfiers, fan and reheat
- Current active alarms
- Setpoint control for alarms

The pCO web card configuration interface provides limited access to control room temp/humidity a log with the ability to reset alarms.

NOTE: Critical alarms will require manual reset at the unit level.

pLAN Stand Alone Network

Programmable Local Area Network

Local and remote monitoring can be achieved with our advanced microcontroller. Based systems are used to provide standalone supervision and control over a pLAN network giving the flexibility of a BMS system at the fraction of the cost.

The pLAN communication option allows two or more systems to talk to each other, pLAN can be programmed for system rotation and for system failure over redundancy.

- Supports up to 16 units
- Lead/lag with multiple active & standby
- Unit rotation and auto changeover
- Alarm switchover to standby
- Assisted cooling
- Assisted heating
- Assisted humidification
- Dehumidification

Communication

The intelligent pCO web speaks many languages and communicates with Building Management Systems (BMS) throught BacNET, SNMP, FTP and email

Web

NETWORK

Custom designed based on your required specifications needs.

System 2000 Chilled Water (CW)

- Custom 70 ton chilled water system with free cooling
- Outside air economizer with evaporator media
- Motorized outside air dampers
- Seismic structural frame and cabinet
- Custom controls

"Compu-Aire Inc. offering flexible and reliable Air Conditioning Systems"

Compu-Aire Inc. is a specialty air conditioning design and manufacture company located in the greater Los Angeles area.

We have been providing quality equipment since 1980. We proudly offer products, which employ the latest "State of the Art" control and energy management technology, regardless of the size of your operation.

ISO 9001:2008 Certified Company

- Compu-Aire Inc. has a complete range of environmental products and systems to keep your computer or other appliances running at their best.
- Compu-Aire Inc. has expanded into a complete line of energy efficient, reliable air conditioners for use in virtually all applications.
- Compu-Aire Inc. products are designed specifically for precision applications and feature high reliability, efficient energy utilization and minimum maintenance.
- Compu-Aire Inc. family of air conditioners ranges from 1.5 to 70 tons, and includes a variety of types and styles.

Scan QR with
your smartphone
Need the APP?
Get it at getscanlife.com

COMPU-AIRE INC.
Specialized Environmental Air Conditioning Systems
8167 Byron Rd. Whittier, CA 90606 Ph 562.945.8971 | Fax 562.696.0724

ISO 9001: 2008 CERTIFIED

Follow us

SUBSTITUTION REQUEST

Project: Shelby Couth Services Building

Substitution Request Number: _____

Birmingham, AL

From: Paul Walker-Climate Control Systems

To: Williams Blackstock

Date: 3-17-20

Attn: _____

A/E Project No.: _____

Re: Request for Substitution for Variable Refrigerant System

Contract For: _____

Specification Title: Variable Refrigerant System

Description: Variable Refrigerant System

Section: Section 238129

Page and Paragraph: _____

Proposed Substitution: Samsung

Trade Name: Samsung

Manufacturer: Samsung

Model No.: DVMS

Mfg. Address 776 Henreitta Rd City, State, zip: Dallas, TX Phone: 888-699-6067

Attached data includes product description, specifications, drawings, photographs, and performance and test data adequate for evaluation of the request; applicable portions of the date are clearly identified.

Attached data also includes a description of changes to the Contract Documents that the proposed substitution will require for its proper installation.

The Undersigned certifies:

- Proposed substitution has been fully investigated and determined to be equal or superior in all respects to specified product.
- Same warranty will be furnished for proposed substitution as for specified product.
- Same maintenance service and source of replacement parts, as applicable, is available.
- Proposed substitution will have no adverse effect on other trades and will not affect or delay progress schedule.
- Proposed substitution does not affect dimensions and functional clearances.
- Payment will be made for changes to building design, including A/E design, detailing, and construction costs caused by the substitution.

Submitted by: Paul Walker

Signed by: Paul Walker

Firm: Climate Control Systems

Address: 710 Maple St, Birmingham, AL 35210

Telephone: 205-956-9220 ext 111 e-mail address: pwalker@ccsi-se.com

---

A/E's REVIEW AND ACTION

- [X] Substitution approved - Make submittals in accordance with Specifications, Substitution Procedures.
- [ ] Substitution approved as noted - Make submittals in accordance with Specifications Substitution Procedures.
- [ ] Substitution rejected - Use specified materials.
- [ ] Substitution Request received too late - Use specified materials.

Signed by: Tom Hattemer

Date: 03/20/2020

Supporting Data Attached: [X] Drawings [X] Product Data [ ] Samples [ ] Tests [ ] Reports [ ] _____

INCOMPLETE INFORMATION WILL BE GROUNDS FOR REJECTION

SAMSUNG

DVM S

The most efficient team in the game.

Discover the entire line of Samsung's innovative VRF systems.
Samsung DVM S - smart products for smarter businesses.

©2018 Samsung HVAC

What is VRF?

Glad you asked.
Variable Refrigerant Flow (VRF) systems consist of outdoor units connected to multiple indoor units via refrigerant piping to provide cooling and heating to individual zones. The outdoor units can modulate capacity based on the requirements of the individual zones, thus saving energy by not always running at 100% capacity and improving occupant comfort by maintaining temperature as needed in each individual zone.

With design flexibility, premium comfort, and superior performance, Samsung DVM S VRF air conditioning systems offer just the right solution for any application.

Design Flexibility.

Compact Equipment
Small outdoor unit footprints allow for installation in applications where space is limited, such as on crowded rooftops, or in tight mechanical closets. DVM S systems feature a design diversity ratio of 50 - 200%**. Diversity ratios above 100% means connecting more indoor unit capacity than outdoor capacity taking advantage of shifting building loads^.

Wide Variety of Indoor Unit Options
Our indoor units offer superior performance, flexible installation, and ease of operation. These units employ innovative technologies, like our Wind-Free™* cooling technology, to optimize comfort in any environment. With over 10 types of indoor units, ranging from 5,000 to 96,000 Btu/h, there are solutions for almost any application.

Extended Piping Length
DVM S systems offer installation options with extended piping length up to 722 ft, vertical separation up to 361 ft between the outdoor unit and furthest indoor unit, and 164 ft between the highest and lowest indoor units.

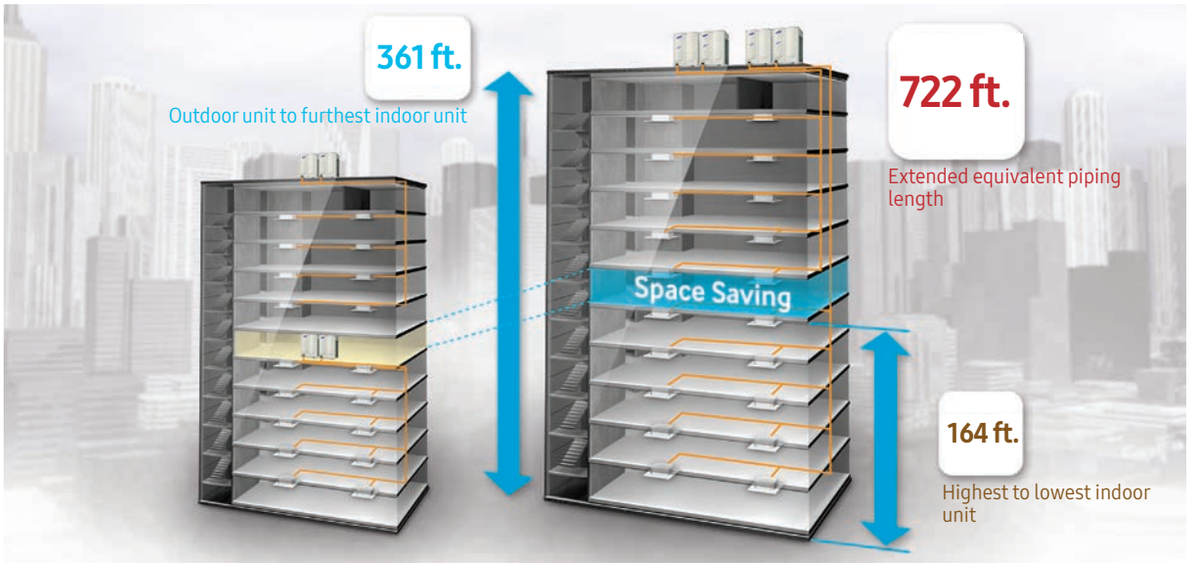

Control Integration Options
A number of control options are available to fit a variety of project needs, from simple local controllers to full central control options. This grants the capability to integrate into any Building Management System (BMS) through BACnet, LonWorks, or ModBus.

Removable EEPROM Chip
DVM S systems are equipped with a removable EEPROM chip at the main PCB to store data. This allows for replacement of the control PCB without losing startup information, system settings, and other field programmed data. In addition, this allows for ease of startup, commissioning, and product registration.

*The Wind-Free™ unit delivers an air current that is under 0.15 m/s while in Wind-Free™ mode. Air velocity that is below 0.15 m/s is considered "still air" as de ned by ASHRAE 55-2013 (American Society of Heating, Refrigerating, and Air-Conditioning Engineers).
**Restrictions apply.
^Designs above 130% requires an engineering review for approval.

Comfort.

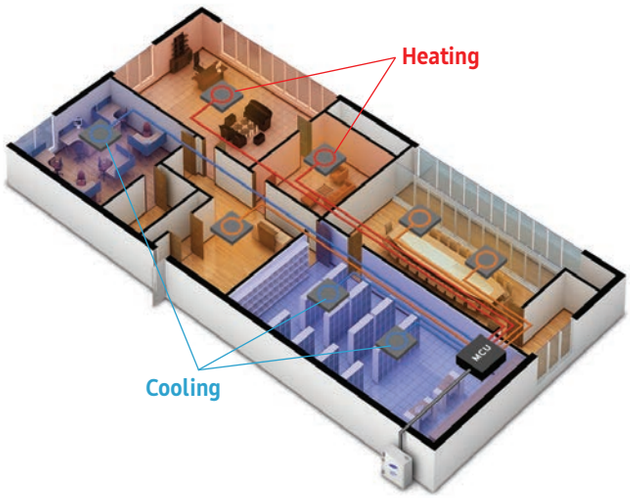

Ultimate Zoning Solution
Samsung DVM S systems allow for precise temperature control in multiple zones, providing comfort to a wide range of occupants. Heat Recovery systems add the capability to heat and cool separate zones simultaneously making it a superior choice.

Quiet Operation
Samsung systems are meticulously designed with the user in mind, and minimizing sound levels is a key design aspect our engineers focus on.

Performance.

Flash Injection Technology
DVM S systems† uniquely feature flash injection compressor technology that increases heating performance with a two-phase refrigerant that is activated during heating mode in low ambient conditions.

Efficient
Samsung DVM S systems feature several smart technologies that are designed to deliver comfort and efficiency. These systems provide the perfect solution for businesses looking to optimize power and energy costs.

Intelligent Defrost Technology
DVM S systems do not only consider time and temperature like most VRF systems, but temperature and outdoor heat exchanger air resistance to determine when to start defrost operation‡.

Low Ambient Heating
With the ability to produce high heating capacity at -13°F (-25°C), our DVM S systems are a smart solution for commercial buildings in areas that experience low outdoor ambient temperature. Some models may produce up to 100% heating capacity at -13°F (-25°C) outdoor ambient temperature.

Low Ambient Cooling
Compatible with both DVM S Heat Pump and Heat Recovery models, our Low Ambient Cooling Hood provides 100% cooling capacity down to -13°F (-25°C). Advanced integrated logic allows for louver positioning based on outdoor unit high pressure, outdoor ambient temperature, compressor compression ratio, and operating mode.

†Excludes DVM S Eco 3, 4, and 4.5 ton, and DVM S Water systems.
‡Excludes DVM S Water systems.

Outdoor Units

DVM S

DVM S systems offer a wide array of sizes, system combinations and control options, providing flexible designs and applications.

6 ton

8, 10, 12, 14 and 16 ton

18 ton*

- Heat Pump and Heat Recovery
- 208-230V / 60Hz / 3 Ø or 460V / 60Hz / 3 Ø
- 6, 8, 10, 12, 14, 16, and 18* ton single modules
- Connect up to 3 units for system capacities up to 44 tons
- Connect up to 64 indoor units
- Outdoor unit static pressure up to 0.32" WC

*460V only

6 and 8 ton

DVM S Max Heat™

DVM S Max Heat™ can provide 100% heating performance at -13°F (-25°C), providing comfort and reliability for applications in extreme climate conditions.

- Heat Pump and Heat Recovery
- 208-230V / 60Hz / 3 Ø or 460V / 60Hz / 3 Ø
- 6 and 8 ton single modules
- Connect up to 3 units for system capacities up to 24 tons
- Connect up to 49 indoor units
- Outdoor unit static pressure up to 0.32" WC

MAX HEAT™

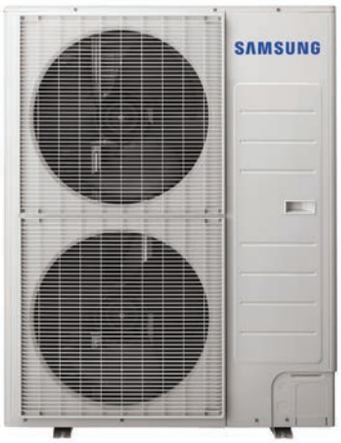

DVM S Eco
This compact system is the perfect choice for high efficiency heating and cooling of residential and light commercial needs.

- Heat Pump and Heat Recovery
- 208-230V / 60Hz / 1 Ø
- 3, 4, 4.5, and 5 ton single modules
- Connect up to 10 indoor units

3.18, 3.98 and 4.55 ton

6, 8 and 10 ton

16 and 20 ton

DVM S Water
These advanced water source systems are applicable for both commercial and residential applications. It's a great option for retrofit or new construction projects that are using closed-loop water systems or geothermal sources for their heating and cooling needs.

- Heat Pump
- 208-230V / 60Hz / 1 Ø
- 3.18, 3.98, and 4.55 ton single modules
- Connect up to 9 indoor units

- Heat Pump or Heat Recovery (setting configured during installation)
- 208-230V / 60Hz / 3 Ø or 460V / 60Hz / 3 Ø
- 6, 8, 10, 16, and 20 ton single modules
- Connect up to 3 units for system capacities up to 50 tons
- Connect up to 64 indoor units

DVM Chiller
The DVM Chiller connects to multiple third-party Fan Coil Units (indoor units) via water piping to provide cooling and heating to individual zones. Like VRF outdoor units, the DVM Chiller can modulate its capacity depending on the requirements of the various zones, which saves energy and improves occupant comfort.

- Heat Pump
- 208-230V / 60Hz / 3 Ø or 460V / 60Hz / 3 Ø
- 10 and 15 ton modules
- Connect up to 16 units for system capacities up to 240 tons
- Outdoor unit static pressure up to 0.32" WC

DVM-Pro software is required to properly design Samsung DVM S systems. DVM-Pro design software is available for download at samsunghvac.com.

Indoor Units

Capacities shown in Btu/h

360 CASSETTE
9K-48K

WIND-FREE™* 4-WAY CASSETTE
9K-48K

WIND-FREE™*
MINI 4-WAY CASSETTE
5K-20K

WIND-FREE™* 1-WAY CASSETTE
7,500-12K

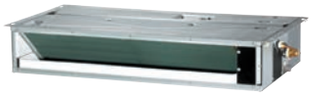

SLIM DUCT
7,500-48K

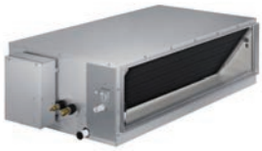

HSP DUCT
(High Static Pressure)
54K-96K

OAP DUCT
(Outside Air Processing)
72K-96K

DUCT S
7,500-48K

DVM WHISPER
5K-28K

MAX
32K

CEILING / WALL CONVERTIBLE
18K-24K

BIG CEILING
36K-48K

FLOOR STANDING
(concealed type)
6K-24K

FLOOR STANDING
(exposed type)
6K-24K

MULTI-POSITION AIR HANDLER
12K-72K

*The Wind-Free™ unit delivers an air current that is under 0.15 m/s while in Wind-Free™ mode. Air velocity that is below 0.15 m/s is considered "still air" as defined by ASHRAE 55-2013 (American Society of Heating, Refrigerating, and Air-Conditioning Engineers).

Controls

Wi-Fi Adapter

Samsung's Wi-Fi Adapter provides control and monitoring without a Data Management Server (DMS) control.

Wi-Fi ADAPTER (MIM-H03UN)

Features:

- Control up to 16 indoor units with a single MIM-H03UN Wi-Fi Adapter, or connect up to 4 for control of up to 64 indoor systems
- Monitor and control: mode, set temperature, fan speed, louver position, filter reminder (push notification), and error status
- F1/F2 (system) or R1/R2 (central control layer) connection
- 7 Day scheduling for a single unit or multiple indoor units
- Basic daily, weekly, or monthly energy consumption monitoring (for supported models only)
- Uses SmartThings App*
- Group configuration allows for simple control of multiple units connected to the same Wi-Fi Adapter.

Individual Control

There are many different ways to control a Samsung system. For applications where a wireless controller is not acceptable (i.e. public facilities), two wired controllers, Touchscreen and Premium, are available to purchase as an option. Based on desired level of control and user interface preference, Samsung offers a variety of wired controllers suitable for any application. Additionally, a Thermostat Adapter can be applied to control up to two indoor units on the same system simultaneously with a 24VAC thermostat.
Visit samsunghvac.com to learn more.

WIRELESS REMOTE CONTROLLER[1]
AR-EH03E

TOUCHSCREEN CONTROLLER
MWR-SH10N

PREMIUM WIRED CONTROLLER[2]
MWR-WE13N

THERMOSTAT ADAPTER
TADPT2

Central Controls

Samsung's Data Management Server (DMS) lets you monitor and control your on-site air conditioning needs remotely. It's the easiest and most convenient way to manage a large number of air conditioning units at once.

DMS 2.5:

- 24-hour standalone web-server
- No special software required
- All management functions integrated
- Heat Pump auto changeover logic
- Customizable programmable logic for intelligent control
- DMS 2.5 + BACnet and LonWorks available
- BACnet and LonWorks gateways will wire and setup the same as DMS 2.5

DMS 2.5
MIM-D01AUN

Additional control options available. Please refer to **www.samsunghvac.com** for all control options, features, and specification.

*The SmartThings app is available for download on the App Store® and Google™ Play store.
[2] Wind-Free models require the MWR-WE13N Premium Wired Controller.
[1] 360 Cassette models require the AR-KH00U wireless controller.

Terra-Sorb® Medium or Coarse Hydrogel

SUPER-ABSORBENT PLANTING GEL

Terra-Sorb Hydrogel is a high-quality, long-lasting acrylamide copolymer gel that absorbs up to 200 times its weight in water and slowly releases it into the root zone for use by plant roots. Terra-Sorb is used as horticultural soil amendment for planting, seeding, sodding, flower bed preparation and potted plants. Terra-Sorb significantly increases the water-holding capacity of soil and can prevent plant loss due to drought stress in non-irrigated areas and where water-holding capacity is low.

Terra-Sorb:

- **Prevents sod and plant loss due to heat and drought**
- **Improves water retention in porous (sandy) soils**
- **Aerates soil as it shrinks and swells**
- **Easy to use**

DIRECTIONS FOR USE (MEDIUM OR COARSE GRADES)

TREE AND SHRUB PLANTINGS Mix Terra-Sorb evenly with the backfill soil at a rate of 2 ounces (by weight) per inch caliper for Balled & Burlaped trees and shrubs, or 1 ounce (by weight) per 5 gallons for containerized trees and shrubs. Volume rates are shown in adjacent chart.

FLOWER BEDS AND GARDENS Terra-Sorb is mixed into the top 4 inches of soil at a rate of 1 pound per 100 square feet prior to planting or seeding. It can be broadcast by shaker, spreader or hand, then raked or rototilled into soil. Not recommended for topdressing on already established beds.

SODDING, SEEDING OR SPRIGGING Terra-Sorb is mixed into the top 4 inches of soil at a rate of 3 pounds per 1,000 square feet or 150 pounds per acre prior to seeding, sodding or sprigging. Apply by shaker, drop spreader or hand, then rake or rototill into the top 4 inches of soil. Not recommended as a topdressing on already established turf.

POTTING MIX AMENDMENT FOR CONTAINERIZED PLANTS AND HANGING BASKETS For machine or hand mixing, add 2 pounds of Terra-Sorb per cubic yard of potting mix. Blend thoroughly throughout mix. For small batches, add 1 ounce Terra-Sorb to each cubic foot of growing or potting mix.

ROOT DIPPING, SEEDLING PACKAGING OR HYDROSEEDING: **Use Terra-Sorb Fine Grade**. Call PHC Customer Service for information about Terra-Sorb Fine (1-800-421-9051).

COMPATIBILITY Terra-Sorb can be used on all plants including grasses.

Water pH: Soil or water pH of 6 to 8 is ideal. Water absorbtion capacity is significantly reduced outside this range.

Terra-Sorb must be mixed into soil. It is not designed for surface applications.

STORAGE/SHELF LIFE

This product is stable in dry storage conditions.

HEALTH AND SAFETY INFORMATION

- In case of allergic reaction(s), treat symptoms and contact physician.
- Avoid breathing dust or spray mist.
- Wash hands after handling.
- **Keep out of reach of children.**

GUARANTEED ANYLSIS OF SOIL AMENDING INGREDIENTS

ACTIVE INGREDIENTS	% by Weight
Potassium Polyacrylamide Acrylate Copolymer	93%
INERT INGREDIENTS: Water*	7%

*Water content is derived from atmospheric humidity absorbed during storage.

APPLICATION RATES for Terra-Sorb Medium and Coarse Grades

TREE CALIPER	TERRA-SORB VOLUME
1 inch	2-1/2 ounces
2 inch	4 ounces
3 inch	1 cup
4 inch	11 ounces
5 inch	1 pint
6 inch	21 ounces
7 inch	27 ounces
8 inch	1 quart
CONTAINER SIZE	**TERRA-SORB VOLUME**
1 gallons	1/2 ounce
3 gallons	1 ounce
5 gallons	1-1/3 ounces
7 gallons	2 ounces
10 gallons	2-1/2 ounces
15 gallons	4 ounces
20 gallons	4-1/2 ounces
35 gallons	6-1/2 ounces
50 gallons	1 cup
100 gallons	12 ounces
200 gallons	24 ounces
400 gallons	1-1/2 quarts
90 inch spade	24 ounces
BOX TREES	**TERRA-SORB VOLUME**
24 inch	1 cup
30 inch	12 ounces
36 inch	1 pint

SIZE GRADES:

Terra-Sorb comes in three particle sizes:

Coarse: 2 to 4 mm diameter
Medium: 0.75 to 2 mm diameter
Fine: 0.1 to 0.75 mm diameter

PACKAGING

30 x 3-oz handy paks (medium grade only),
10-Lb Bag and 50-Lb bag (medium or coarse grades)

TECHNICAL ASSISTANCE

For technical assistance, call 1-800-421-9051

Plant Health Care, Inc.
440 William Pitt Way • Pittsburgh, PA 15238
Tel: (800) 421-9051 • Fax: (412) 826-5445
www.planthealthcare.com

© 2005 Plant Health Care, Inc 9/06

PLANT HEALTH CARE, INC.

LIMITED WARRANTY Plant Health Care, Inc. offers for sale the product Terra-Sorb® Hydrogel. THERE ARE NO WARRANTIES OF MERCHANTABILITY OR FITNESS FOR A PARTICULAR PURPOSE which extend beyond the description of the product in this specification sheet or other product literature, and liability of Plant Health Care, Inc. is limited to replacement of any product which does not meet these specifications. Suggestions for use and information on results obtained with its use are assumed by the manufacturer to be reliable. Since conditions of use are outside the control of Plant Health Care, Inc. the buyer is responsible for all results, including injury and damage stemming from the use of this product alone or in combination with other materials.

TREEGATOR® ORIGINAL

SLOW RELEASE WATERING BAG FOR SHADE TREES

BENEFITS:

- *Ideal for newly planted shade or street trees.*
- *Reduces transplant and drought shock.*
- *100% water absorption with no run-off.*
- *Install and fill in minutes with no tools required.*
- *Deep water saturation with every fill.*
- *Fill just 1 to 2 times per week, or as needed.***
- *Promotes deep root growth.*
- *Non-invasive design will not harm existing landscape.*
- *Can be used with nutrient / chemical additives.***
- *Zip multiple bags together to accommodate large trees.*
- *Made in the U.S.A. with a 5-year limited warranty.*

***REFER TO WATERING CAPACITY / FREQUENCY CHART SHOWN BELOW*

DESCRIPTION:

If you plant shade trees, you need a Treegator® Original Slow Release Watering Bag! Golf courses, parks, cities, nurseries, landscapers, DOT's, resorts and homeowners all love its simple, affordable patented tree watering technology. Makes anyone a watering professional. Perfect for newly planted or established trees up to 8" in caliper, with branches beginning at least 25 inches from the ground or higher. Save time, water, effort and trees!

SPECS:

Single bag fits min. 1 inch to max. 4 inch caliper tree with branches at least 25" from the ground or higher.
Use a Double Bag setup (2 single bags zipped together back-to-back) to water 4 inch to 8 inch caliper trees.
Made of green polyethylene with scrim reinforcement, black polypro straps and nylon zippers.
2 water release points per bag.
Bag is empty in approximately 5 to 9 hours.
UV stabilized to withstand exposure to sunlight.
Fill opening fits up to 3" diameter hose.

DIRECTIONS FOR USE:

Place around tree trunk, with the zippers on uphill side of tree.
Wrap both sides around trunk until zippers meet and zip together from bottom to top.
Lift tag to expose fill opening at top of bag.
Insert hose into fill opening and begin filling with water.
Fill bag to 1/4 capacity,
Gently lift up on straps at top of bag to expand bottom.
Fill to desired level and let empty.
Continuously waters for approximately 5 to 9 hours.

MEASUREMENTS:

Full - 30" tall x 18" wide (at base)

WATERING CAPACITY / FREQUENCY CHART:

Treegator® Original Bag Setup	Trunk Caliper (diameter)	Approx. Water Capacity (per single bag)	Recommended Fills per Week
Single Bag Setup	**1 to 2 inch** (3 to 5 cm)	**15 gallons** (56.78 liters)	1 Fill per Week
	2 to 3 inch (5 to 8 cm)	**14.75 to 14.25 gallons** (55.84 to 53.94 liters)	2 Fills per Week
Double Bag Setup* (2 single bags)	**0.00 inch** (stand-alone†)	**25 gallons** (94.63 liters)	Varies based on application
	4 to 5 inch (10 to 13 cm)	**23.50 gallons** (89.95 liters)	1 Fill per Week
	5 to 8 inch (13 to 20 cm)	**22.75 to 21.5 gallons** (86.11 to 81.38 liters)	2 Fills per Week

**Double Bag setup is two (2) single Treegator® Original bags zipped together back-to-back.*
†When watering older established trees with fully developed root systems, a Double Bag setup can also be used as a stand-alone watering solution (i.e. not wrapped around a trunk)

DOOR SCHEDULE

DOOR NO.	TO ROOM	FROM ROOM	DOOR WIDTH	DOOR HEIGHT	DOOR TYPE	DOOR MATERIAL	DOOR FINISH	FRAME TYPE	FRAME MATERIAL	FRAME FINISH	HARDWARE SETS - SEE SPECS	FIRE RATING	COMMENTS
328	OFFICE	CORRIDOR	3' - 0"	8' - 0"	C1	WOOD/GL	STN	F1	HM	PNT	HW-22		
329	CORRIDOR	OFFICE	3' - 0"	8' - 0"	C1	WOOD/GL	STN	F1	HM	PNT	HW-22		
330	CORRIDOR	MAINTENANCE	3' - 0"	8' - 0"	A1	WOOD	STN	F1	HM	PNT	HW-22		
331	CORRIDOR	CORRIDOR	3' - 0"	8' - 0"	C1	WOOD/GL	STN	F1	HM	PNT	HW-18		
S1-3	STAIR #1	CORR.	3' - 0"	8' - 0"	C1	WOOD/GL	STN	F1	HM	PNT	HW-6	60 MIN.	
S2-3	CORRIDOR	STAIR #2	3' - 0"	8' - 0"	B1	STL	PNT	F1	HM	PNT	WS-106	90 MIN.	STORM SHELTER

DOOR SCHEDULE

DOOR NO.	TO ROOM	FROM ROOM	DOOR WIDTH	DOOR HEIGHT	DOOR TYPE	DOOR MATERIAL	DOOR FINISH	FRAME TYPE	FRAME MATERIAL	FRAME FINISH	HARDWARE SETS - SEE SPECS	FIRE RATING	COMMENTS
FIRST FLOOR													
001	EQUIPMENT YARD		4' - 0"	8' - 0"	B1	STL	PNT	F1	HM	PNT	WS-103	90 MIN.	STORM SHELTER
101	LOBBY		6' - 0"	8' - 0"	E2	ALUM/GL	FACTORY	-	ALUM	FACTORY	HW-1		DECORATIVE PULL
102	MAIL	CORR.	3' - 0"	8' - 0"	A1	WOOD	STN	F1	HM	PNT	HW-17		
103	ELECTRICAL	CORR.	3' - 0"	8' - 0"	A1	WOOD	STN	F1	HM	PNT	HW-10		
104	MENS	LOBBY	3' - 0"	8' - 0"	A1	WOOD	STN	F1	HM	PNT	HW-25		
104A	MEN	MENS	3' - 6"	8' - 0"	CO	--	--	-	WOOD	PNT	--		
105	WOMENS	LOBBY	3' - 0"	8' - 0"	A1	WOOD	STN	F1	HM	PNT	HW-25		
105A	WOMENS	WOMEN	3' - 6"	8' - 0"	CO	--	--	-	WOOD	PNT	--		
105B	WOMEN	MOTHERS RM	3' - 0"	8' - 0"	A1	WOOD	STN	F1	HM	PNT	HW-24		
106	LICENSING	CORR.	3' - 0"	8' - 0"	C1	WOOD/GL	STN	F1	HM	PNT	HW-15		
107	ALEA WAITING	MECHANICAL	4' - 0"	8' - 0"	A1	WOOD	STN	F1	HM	PNT	HW-19		
108	SHERIFF	CORR.	3' - 0"	8' - 0"	A1	WOOD	STN	F1	HM	PNT	HW-14		
109A	CORRIDOR	ALEA WAITING	3' - 0"	8' - 0"	A1	WOOD	STN	F1	HM	PNT	HW-15		
109B	ALEA WAITING	CORR.	3' - 0"	8' - 0"	D1	WOOD/GL	STN	F1	HM	PNT	HW-15		
111	ALEA	OFFICE	3' - 0"	8' - 0"	A1	WOOD	STN	-	ALUM	FACTORY	HW-22		
112	IT	ALEA	3' - 0"	8' - 0"	A1	WOOD	STN	F1	HM	PNT	HW-23		
113	RISER		3' - 0"	8' - 0"	H1	STL	PNT	F2	HM	PNT	HW-9		
114A	CORRIDOR	VEST.	3' - 0"	8' - 0"	B1	STL	PNT	F1	HM	PNT	WS-109	90 MIN.	STORM SHELTER
114B	SERVER / IDF	VEST.	3' - 0"	8' - 0"	A1	WOOD	STN	F1	HM	PNT	HW-15		
115		SERVER / IDF	4' - 0"	8' - 0"	B1	STL	PNT	F2	HM	PNT	WS-101	90 MIN.	STORM SHELTER, PANC HARDWARE
116	SERVER / IDF	ELECTRICAL	3' - 0"	8' - 0"	A1	WOOD	STN	F1	HM	PNT	HW-10	20 MIN.	
117	AV	MULTI-PURPOSE ROOM	3' - 0"	8' - 0"	A1	WOOD	STN	F1	HM	PNT	HW-23		
118	MEDIUM CONFERENCE	RECEPTION	3' - 0"	8' - 0"	F1	ALUM/GL	FACTORY	-	ALUM	FACTORY	HW-3		
119	RECEPTION		6' - 0"	8' - 0"	F2	ALUM/GL	FACTORY	-	ALUM	FACTORY	HW-4		DECORATIVE PULL
119A	RECEPTION		6' - 0"	8' - 0"	E2	ALUM/GL	FACTORY	-	ALUM	FACTORY	HW-1		
120	LICENSING	HUDDLE	3' - 0"	8' - 0"	F1	ALUM/GL	FACTORY	-	ALUM	FACTORY	HW-26		
121	MULTI-PURPOSE	LICENSING	3' - 0"	8' - 0"	D1	WOOD/GL	STN	F1	HM	PNT	HW-22		
122	SUPERVISOR	LICENSING	3' - 0"	8' - 0"	A1	WOOD	STN	-	ALUM	FACTORY	HW-22		
123	BOOK KEEPER	LICENSING	3' - 0"	8' - 0"	G1	WOOD	STN	F1	HM	PNT	HW-22		
124	RECORD STORAGE	LICENSING	3' - 0"	8' - 0"	D1	WOOD/GL	STN	F1	HM	PNT	HW-23		
125	LICENSING	TELLER	3' - 0"	8' - 0"	D1	WOOD/GL	STN	F1	HM	PNT	HW-22		
126	LICENSING	OFFICE	3' - 0"	8' - 0"	A1	WOOD	STN	F1	HM	PNT	HW-22		
127	UNISEX	LICENSING	3' - 0"	8' - 0"	A1	WOOD	STN	F1	HM	PNT	HW-24		
128	COFFEE	LICENSING	3' - 0"	8' - 0"	C1	WOOD/GL	STN	F1	HM	PNT	HW-26		
128A	COFFEE	MECH	3' - 0"	8' - 0"	A1	WOOD	STN	F1	HM	PNT	HW-23		
129A	COPY	LICENSING	3' - 0"	8' - 0"	CO	--	--	-	WOOD	PNT	--		
129B	LICENSING		3' - 0"	8' - 0"	E1	ALUM/GL	FACTORY	-	ALUM	FACTORY	HW-2		
129C	LOBBY	LICENSING	6' - 0"	8' - 0"	F2	ALUM/GL	FACTORY	-	ALUM	FACTORY	HW-5		DECORATIVE PULL
130A	RECEPTION	MULTI-PURPOSE ROOM	6' - 0"	8' - 0"	C2	WOOD/GL	STN	F1	HM	PNT	HW-13		
130B	MULTI-PURPOSE ROOM	CORRIDOR	6' - 0"	8' - 0"	C2	WOOD/GL	STN	F1	HM	PNT	HW-13		
130C	MULTI-PURPOSE ROOM		3' - 0"	8' - 0"	H1	STL	PNT	F2	HM	PNT	HW-8		
132	FAMILY TOILET	VENDING	3' - 0"	8' - 0"	A1	WOOD	STN	F1	HM	PNT	HW-24		
133	CORRIDOR	VENDING	4' - 0"	8' - 0"	CO	--	--	-	WOOD	PNT	--		
134	CUST.	CORRIDOR	3' - 0"	8' - 0"	A1	WOOD	STN	F1	HM	PNT	HW-21		
135	MULTI-PURPOSE ROOM	STORAGE	6' - 0"	8' - 0"	A2	WOOD	STN	F1	HM	PNT	HW-16		
137	MULTI-PURPOSE ROOM	WARMING KITCHEN	4' - 0"	8' - 0"	C1	WOOD/GL	STN	F1	HM	PNT	HW-20		
S1-1	STAIR #1	CORR.	3' - 0"	8' - 0"	C1	WOOD/GL	STN	F1	HM	PNT	HW-6	60 MIN.	
S2-1A	VEST.	STAIR #2	3' - 0"	8' - 0"	C1	WOOD/GL	STN	F1	HM	PNT	HW-6	90 MIN.	
S2-1B		STAIR #2	3' - 0"	8' - 0"	B1	STL	PNT	F2	HM	PNT	WS-102	90 MIN.	STORM SHELTER
S3-1		STAIR #3	3' - 0"	8' - 0"	B1	STL	PNT	F2	HM	PNT	WS-102	90 MIN.	STORM SHELTER
SECOND FLOOR													
201	CORRIDOR	CORRIDOR	3' - 0"	8' - 0"	A1	WOOD	STN	F1	HM	PNT	HW-12		
202	CORRIDOR	STAFF LOUNGE	3' - 0"	8' - 0"	D1	WOOD/GL	STN	F1	HM	PNT	HW-18		
203	CORRIDOR	ELECTRICAL	3' - 0"	8' - 0"	A1	WOOD	STN	F1	HM	PNT	HW-10		
204	MEN	CORRIDOR	3' - 0"	8' - 0"	A1	WOOD	STN	F1	HM	PNT	HW-25		
204A	MEN	MEN	3' - 6"	8' - 0"	CO	--	--	-	WOOD	PNT	--		
205	WOMEN	CORRIDOR	3' - 0"	8' - 0"	A1	WOOD	STN	F1	HM	PNT	HW-25		
205A	WOMEN	WOMEN	3' - 6"	8' - 0"	CO	--	--	-	WOOD	PNT	--		
206A	TRAINING / MULTI-PURPOSE	CORRIDOR	3' - 0"	8' - 0"	C1	WOOD/GL	STN	F1	HM	PNT	HW-18		
206B	CORRIDOR	TRAINING / MULTI-PURPOSE	3' - 0"	8' - 0"	C1	WOOD/GL	STN	F1	HM	PNT	HW-18		
207	STORAGE	TRAINING / MULTI-PURPOSE	6' - 0"	8' - 0"	A2	WOOD	STN	F1	HM	PNT	HW-16		
208	DATA	TRAINING / MULTI-PURPOSE	3' - 0"	8' - 0"	A1	WOOD	STN	F1	HM	PNT	HW-19		
209A	CORRIDOR	SHERIFF WAITING	3' - 0"	8' - 0"	D1	WOOD/GL	STN	F1	HM	PNT	HW-17		
209B	DEBRIEF	SHERIFF WAITING	3' - 0"	8' - 0"	C1	WOOD/GL	STN	F1	HM	PNT	HW-19		
210	CORR.	CORRIDOR	3' - 0"	8' - 0"	B1	STL	PNT	F1	HM	PNT	WS-108	90 MIN.	STORM SHELTER
211	FITNESS	CORRIDOR	3' - 0"	8' - 0"	D1	WOOD/GL	STN	F1	HM	PNT	HW-14		
212	FITNESS	STOR.	3' - 0"	8' - 0"	A1	WOOD	STN	F1	HM	PNT	HW-23		
213	STORAGE	CORRIDOR	3' - 0"	8' - 0"	A1	WOOD	STN	F1	HM	PNT	HW-14		
214A	MECHANICAL	CORRIDOR	3' - 0"	8' - 0"	A1	WOOD	STN	F1	HM	PNT	HW-19		
214B	STORAGE	CORRIDOR	3' - 0"	8' - 0"	A1	WOOD	STN	F1	HM	PNT	HW-23		
215	QUIET	CORRIDOR	3' - 0"	8' - 0"	C1	WOOD/GL	STN	F1	HM	PNT	HW-22		
216	INTERVIEW	DEBRIEF	3' - 0"	8' - 0"	A1	WOOD	STN	F1	HM	PNT	HW-23		
217	OFFICE	DEBRIEF	3' - 0"	8' - 0"	D1	WOOD/GL	STN	F1	HM	PNT	HW-22		
218	DEBRIEF	REPORTING	3' - 6"	8' - 0"	CO	--	--	-	WOOD	PNT	--		
219	DEBRIEF	STORAGE	3' - 0"	8' - 0"	A1	WOOD	STN	F1	HM	PNT	HW-23		
220	DEBRIEF	INTERVIEW	3' - 0"	8' - 0"	A1	WOOD	STN	F1	HM	PNT	HW-23		
221	OFFICE	DEBRIEF	3' - 0"	8' - 0"	D1	WOOD/GL	STN	F1	HM	PNT	HW-22		
223	CORRIDOR	911 RECEPTION	3' - 0"	8' - 0"	A1	WOOD	STN	-	ALUM	FACTORY	HW-14		
224	COPY	911 RECEPTION	6' - 0"	8' - 0"	CO	--	--	-	WOOD	PNT	--		
225	OFFICE MANAGER	911 RECEPTION	3' - 0"	8' - 0"	A1	WOOD	STN	-	ALUM	FACTORY	HW-22		
226A	CONFERENCE	STAFF LOUNGE	3' - 0"	8' - 0"	A1	WOOD	STN	F1	HM	PNT	HW-14		
226B	CONFERENCE	911 RECEPTION	3' - 0"	8' - 0"	D1	WOOD/GL	STN	F1	HM	PNT	HW-22		
227	FILES	STAFF LOUNGE	3' - 0"	8' - 0"	A1	WOOD	STN	F1	HM	PNT	HW-14		
228	911 RECEPTION	CORRIDOR	3' - 0"	8' - 0"	B1	STL	PNT	F1	HM	PNT	WS-105	90 MIN.	STORM SHELTER, PROVIDE DOOR ON MAG.HOLD OPEN
229	SUPPLY	CORRIDOR	3' - 0"	8' - 0"	A1	WOOD	STN	F1	HM	PNT	HW-23		
230	RADIO TECH/QA	CORRIDOR	3' - 0"	8' - 0"	A1	WOOD	STN	-	ALUM	FACTORY	HW-22		
230A			9' - 3"	13' - 9"	S1	STL	FACTORY		STL	FACTORY	WS-110	90 MIN.	STORM SHUTTER, MOTORIZED
231	FUTURE OFFICE	CORRIDOR	3' - 0"	8' - 0"	A1	WOOD	STN		ALUM	FACTORY	HW-22		
232	CORRIDOR	TTO AUDITOR	3' - 0"	8' - 0"	A1	WOOD	STN		ALUM	FACTORY	HW-22		
232A			6' - 3"	13' - 9"	S1	STL	FACTORY		STL	FACTORY	WS-110	90 MIN.	STORM SHUTTER, MOTORIZED
233	CORRIDOR	IT TECH ANALYST	3' - 0"	8' - 0"	A1	WOOD	STN		ALUM	FACTORY	HW-22		
233A			7' - 9 1/2"	13' - 9"	S1	STL	FACTORY		STL	FACTORY	WS-110	90 MIN.	STORM SHUTTER, MOTORIZED
234A	OPERATIONS	FUTURE OFFICE	3' - 0"	8' - 0"	A1	WOOD	STN		ALUM	FACTORY	HW-22		
234B	FUTURE OFFICE	OPERATIONS	3' - 0"	8' - 0"	A1	WOOD	STN		ALUM	FACTORY	HW-22		
235	CORRIDOR	DEP. DIRECTOR	3' - 0"	8' - 0"	A1	WOOD	STN		ALUM	FACTORY	HW-22		
235A			9' - 3"	13' - 9"	S1	STL	FACTORY		STL	FACTORY	WS-110	90 MIN.	STORM SHUTTER, MOTORIZED
236A	CORRIDOR	CORRIDOR	3' - 0"	8' - 0"	C1	WOOD/GL	STN	F1	HM	PNT	HW-14		
236B	OPERATIONS	CORRIDOR	3' - 0"	8' - 0"	CO	--	--	-	WOOD	PNT	--		
237	DIRECTOR	CORRIDOR	3' - 0"	8' - 0"	D1	WOOD/GL	STN		HM	PNT	HW-22		
237A			9' - 3"	13' - 9"	S1	STL	FACTORY		STL	FACTORY	WS-110	90 MIN.	STORM SHUTTER, MOTORIZED
237B			7' - 9"	13' - 9"	S1	STL	FACTORY		STL	FACTORY	WS-110	90 MIN.	STORM SHUTTER, MOTORIZED
238	OPERATIONS	OP. MANAGER	3' - 0"	8' - 0"	D1	WOOD/GL	STN		ALUM	FACTORY	HW-14		
238B			6' - 3"	13' - 9"	S1	STL	FACTORY		STL	FACTORY	WS-110	90 MIN.	STORM SHUTTER, MOTORIZED
239	CORRIDOR	CORR.	3' - 0"	8' - 0"	B1	STL	PNT	F1	HM	PNT	WS-104	90 MIN.	STORM SHELTER
241	CORR.	WOMEN	3' - 0"	8' - 0"	A1	WOOD	STN	F1	HM	PNT	HW-25		
241B	SHOWER	WOMEN	3' - 0"	8' - 0"	CO	--	-	F1	WOOD	PNT	HW-24		
242	STOR.	CORR.	3' - 0"	8' - 0"	A1	WOOD	STN	F1	HM	PNT	HW-23		
243	CORR.	CUST.	3' - 0"	8' - 0"	A1	WOOD	STN	F1	HM	PNT	HW-21		
244	MEN	CORR.	3' - 0"	8' - 0"	A1	WOOD	STN	F1	HM	PNT	HW-25		
244B	MEN	SHOWER	3' - 0"	8' - 0"	CO	--	--	-	WOOD	PNT	HW-24		
245	CORR.	ELECTRICAL	6' - 0"	8' - 0"	A2	WOOD	STN	F1	HM	PNT	HW-16		
246A	CORR.	OPERATIONS	3' - 0"	8' - 0"	D1	WOOD/GL	STN	F1	HM	PNT	HW-19		
246B	OPERATIONS	CORR.	3' - 0"	8' - 0"	D1	WOOD/GL	STN	F1	HM	PNT	HW-19		
247	SERVER /DF	OPERATIONS	3' - 0"	8' - 0"	A1	WOOD	STN	F1	HM	PNT	HW-14		
248	OPERATIONS	SUPER 1+2	3' - 0"	8' - 0"	A1	WOOD	STN	-	ALUM	FACTORY	HW-22		
249	SUPER 3+4	OPERATIONS	3' - 0"	8' - 0"	A1	WOOD	STN	-	ALUM	FACTORY	HW-22		
S1-2	STAIR #1	CORRIDOR	3' - 0"	8' - 0"	C1	WOOD/GL	STN	F1	HM	PNT	HW-6	60 MIN.	
S2-2A	STAIR #2	CORRIDOR	3' - 0"	8' - 0"	B1	STL	PNT	F1	HM	PNT	WS-107	90 MIN.	STORM SHELTER
S2-2B	CORR.	STAIR #2	3' - 0"	8' - 0"	C1	WOOD/GL	STN	F1	HM	PNT	HW-6	90 MIN.	
S3-2	STAIR #3	OPERATIONS	3' - 0"	8' - 0"	C1	WOOD/GL	STN	F1	HM	PNT	HW-7	90 MIN.	
THIRD FLOOR													
302	SHELL SPACE	CORRIDOR	3' - 0"	8' - 0"	C1	WOOD/GL	STN	F1	HM	PNT	HW-15		
303	SHELL SPACE	CORRIDOR	3' - 0"	8' - 0"	A1	WOOD	STN		ALUM	FACTORY	HW-15		
303A	SERVER /DF	SHELL SPACE	3' - 0"	8' - 0"	A1	WOOD	STN	F1	HM	PNT	HW-14		
304	MEN	LOBBY	3' - 0"	8' - 0"	A1	WOOD	STN	F1	HM	PNT	HW-25		
304A	MEN	MEN	3' - 6"	8' - 0"	CO	--	--		WOOD	PNT	--		
305	WOMEN	LOBBY	3' - 0"	8' - 0"	A1	WOOD	STN	F1	HM	PNT	HW-25		
305A	WOMEN	WOMEN	3' - 6"	8' - 0"	CO	--	--		WOOD	PNT	--		
306	DATA	CORR.	3' - 0"	8' - 0"	A1	WOOD	STN	F1	HM	PNT	HW-15		
307	CUST.	LOBBY	3' - 0"	8' - 0"	A1	WOOD	STN	F1	HM	PNT	HW-21		
308	WORKROOM	MECHANICAL	6' - 0"	8' - 0"	A2	WOOD	STN	F1	HM	PNT	HW-16		
309	ELECTRICAL	CORR.	3' - 0"	8' - 0"	A1	WOOD	STN	F1	HM	PNT	HW-23		
310	CORR.	CORRIDOR	3' - 0"	8' - 0"	C1	WOOD/GL	STN	F1	HM	PNT	HW-14		
311A	CORR.	SHELBY 58 INC	3' - 0"	8' - 0"	A1	WOOD	STN		ALUM	FACTORY	HW-15		
311B	CORR.	SHELBY 58 INC	3' - 0"	8' - 0"	A1	WOOD	STN	F1	HM	PNT	HW-11		
312	STORAGE	SHELBY 58 INC	3' - 0"	8' - 0"	A1	WOOD	STN	F1	HM	PNT	HW-23		
313	SHELBY 58 INC	OFFICE	3' - 0"	8' - 0"	D1	WOOD/GL	STN	F1	HM	PNT	HW-22		
314	OFFICE	SHELBY 58 INC	3' - 0"	8' - 0"	D1	WOOD/GL	STN	F1	HM	PNT	HW-22		
315	SHELBY 58 INC	OFFICE	3' - 0"	8' - 0"	D1	WOOD/GL	STN	F1	HM	PNT	HW-22		
316	OFFICE	SHELBY 58 INC	3' - 0"	8' - 0"	D1	WOOD/GL	STN	F1	HM	PNT	HW-22		
317	CORR.	CONFERENCE	3' - 0"	8' - 0"	A1	WOOD	STN		ALUM	FACTORY	HW-22		
318	LOBBY	CONFERENCE	3' - 0"	8' - 0"	A1	WOOD	STN		ALUM	FACTORY	HW-22		
319	CONFERENCE	LOBBY	3' - 0"	8' - 0"	A1	WOOD	STN		ALUM	FACTORY	HW-22		
320	CORR.	BHVRL HEALTH RECEPTION	3' - 0"	8' - 0"	A1	WOOD	STN		ALUM	FACTORY	HW-15		
321A	BHVRL HEALTH RECEPTION	CHILD WAITING	3' - 0"	8' - 0"	D1	WOOD/GL	STN	F1	HM	PNT	HW-18		
321B	CORRIDOR	CHILD WAITING	3' - 0"	8' - 0"	C1	WOOD/GL	STN	F1	HM	PNT	HW-14		
322A	ADULT WAITING	BHVRL HEALTH RECEPTION	3' - 0"	8' - 0"	D1	WOOD/GL	STN	F1	HM	PNT	HW-18		
322B	ADULT WAITING	CORRIDOR	3' - 0"	8' - 0"	C1	WOOD/GL	STN	F1	HM	PNT	HW-14		
323	CASE MANAGEMENT	CORRIDOR	3' - 0"	8' - 0"	C1	WOOD/GL	STN	F1	HM	PNT	HW-22		
324	UNISEX	WORKROOM	3' - 0"	8' - 0"	A1	WOOD	STN	F1	HM	PNT	HW-24		
325	OFFICE	CORRIDOR	3' - 0"	8' - 0"	C1	WOOD/GL	STN	F1	HM	PNT	HW-22		
327	CORRIDOR	OFFICE	3' - 0"	8' - 0"	C1	WOOD/GL	STN	F1	HM	PNT	HW-22		

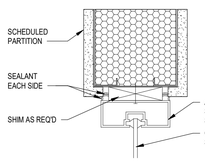

11 A0.3 HEAD/JAMB DETAIL - INTERIOR STOREFRONT
SCALE: 3" = 1'-0"

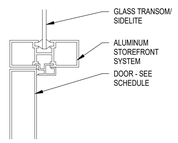

8 A0.3 HEAD/JAMB DETAIL - TRANSOM/SIDELITE
SCALE: 3" = 1'-0"

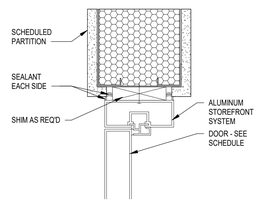

6 A0.3 HEAD/JAMB DETAIL - INT. STOREFRONT DOOR
SCALE: 3" = 1'-0"

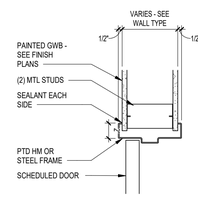

4 A0.3 HEAD DETAIL - METAL DOOR FRAME
SCALE: 1 1/2" = 1'-0"

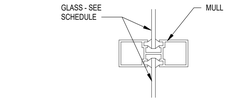

10 A0.3 DETAIL - INTERIOR STOREFRONT MULL
SCALE: 3" = 1'-0"

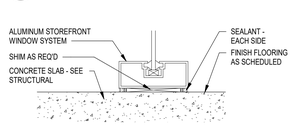

9 A0.3 SILL DETAIL - INTERIOR STOREFRONT WALL
SCALE: 3" = 1'-0"

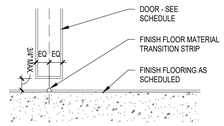

7 A0.3 SILL DETAIL - INTERIOR DOOR
SCALE: 3" = 1'-0"

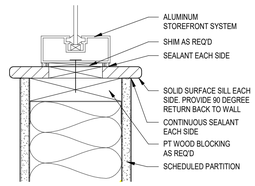

5 A0.3 SILL DETAIL - INT. STOREFRONT WINDOW
SCALE: 3" = 1'-0"

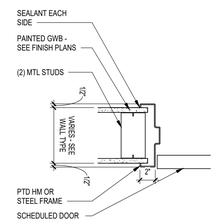

3 A0.3 JAMB DETAIL - METAL DOOR FRAME
SCALE: 1 1/2" = 1'-0"

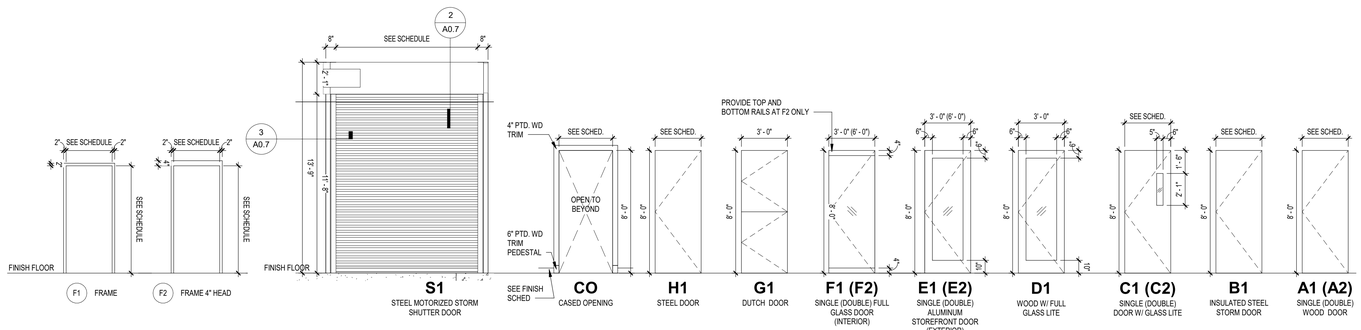

2 A0.3 FRAME ELEVATIONS
SCALE: 1/4" = 1'-0"

1 A0.3 DOOR ELEVATIONS
SCALE: 1/4" = 1'-0"

STATE OF ALABAMA
2522 5471
5821 6438
WILLIAMS BLACKSTOCK ARCHITECTS
6191
REGISTERED ARCHITECT

HWY 280 SHELBY COUNTY SERVICES BUILDING
CONSTRUCTION BID PACKAGE
SHELBY COUNTY DEPARTMENT OF DEVELOPMENT SERVICES
19220 US HWY 280, BIRMINGHAM, AL 35242
19-040.00

ARCHITECT OF RECORD :
WILLIAMS· BLACKSTOCK
ARCHITECTS
ARCHITECTURE INTERIORS PLANNING
SUITE 200
2204 FIRST AVENUE SOUTH
BIRMINGHAM, ALABAMA 35233

KEY PLAN :

ISSUE DATE:
03/06/2020

REVISIONS

NO.	DATE	DESCRIPTION
1	03/13/2020	ADDENDUM #1
2	03/20/2020	ADDENDUM #2

PROJECT NUMBER:
19-040.00

DRAWING TITLE:
DOOR SCHEDULE & ELEVATIONS

SHEET NUMBER:
A0.3

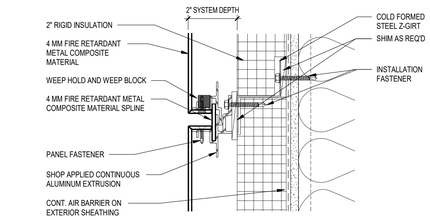

8 A0.8 METAL PANEL SECTION DETAIL- TYPICAL HORIZONTAL JOINT

SCALE: 6" = 1'-0"

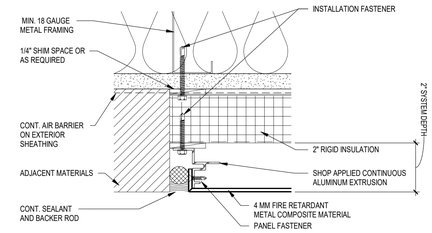

4 A0.8 METAL PANEL PLAN DETAIL - VERTICAL JAMB DETAIL

SCALE: 6" = 1'-0"

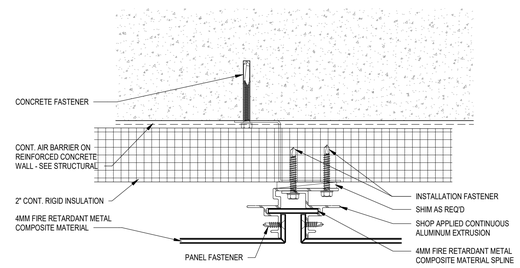

7 A0.8 METAL PANEL PLAN DETAIL

SCALE: 6" = 1'-0"

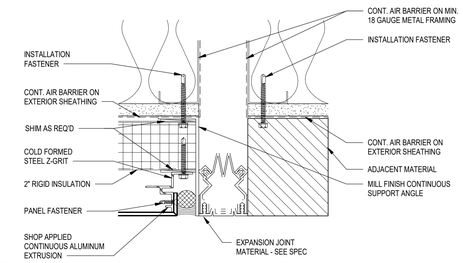

3 A0.8 METAL PANEL PLAN DETAIL - JAMB AT EXPANSION JOINT

SCALE: 6" = 1'-0"

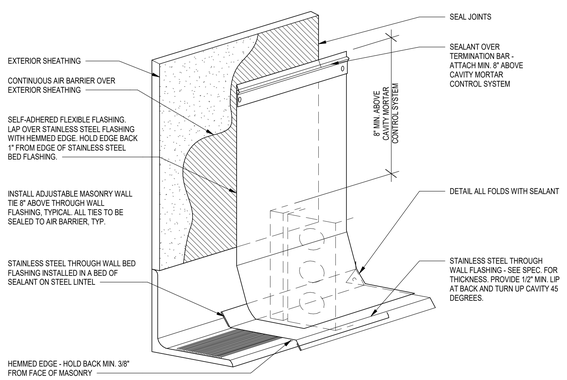

10 A0.8 AXON VIEW - THROUGH WALL FLASHING

SCALE: 3" = 1'-0"

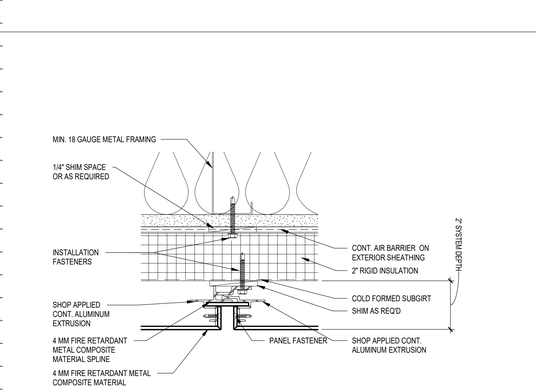

6 A0.8 METAL PANEL PLAN DETAIL- TYPICAL VERTICAL JOINT

SCALE: 6" = 1'-0"

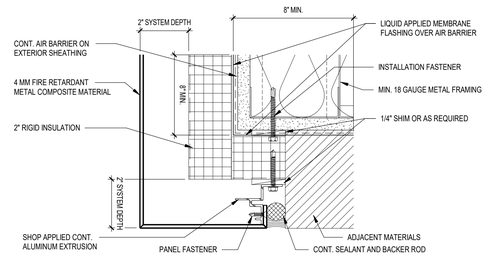

2 A0.8 METAL PANEL SECTION DETAIL - SOFFIT TRANSITION

SCALE: 6" = 1'-0"

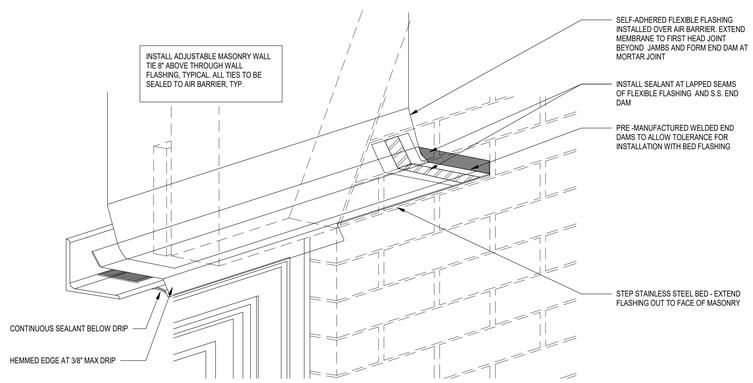

9 A0.8 AXON VIEW - END DAM

SCALE: 3" = 1'-0"

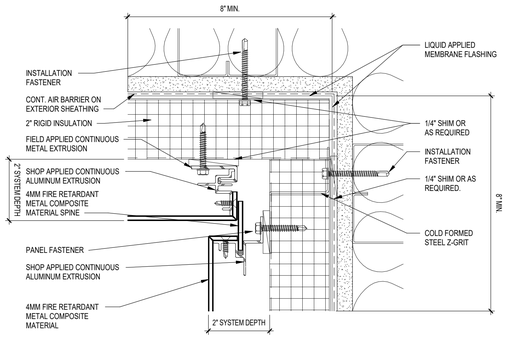

5 A0.8 METAL PANEL PLAN DETAIL - INSIDE CORNER DETAIL

SCALE: 6" = 1'-0"

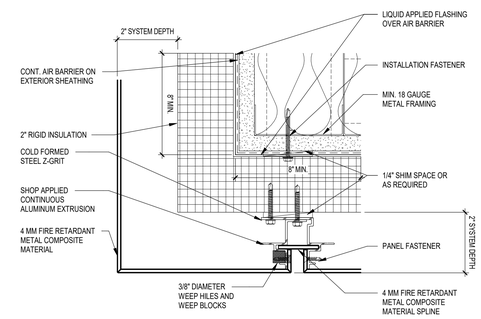

1 A0.8 METAL PANEL SECTION DETAIL - SOFFIT TRANSITION

SCALE: 6" = 1'-0"

STATE OF ALABAMA
2522 5471
5821 6438
WILLIAMS BLACKSTOCK ARCHITECTS
6191
REGISTERED ARCHITECT

HWY 280 SHELBY COUNTY SERVICES BUILDING
CONSTRUCTION BID PACKAGE
SHELBY COUNTY DEPARTMENT OF DEVELOPMENT SERVICES
19220 US HWY 280, BIRMINGHAM, AL 35242
19-040.00

ARCHITECT OF RECORD :
WILLIAMS· BLACKSTOCK
ARCHITECTS
ARCHITECTURE INTERIORS PLANNING
SUITE 200
2204 FIRST AVENUE SOUTH
BIRMINGHAM, ALABAMA 35233

KEY PLAN :

ISSUE DATE:
03/06/2020

REVISIONS

NO.	DATE	DESCRIPTION
1	03/20/2020	ADDENDUM #2

PROJECT NUMBER:
19-040.00

DRAWING TITLE:
TYPICAL EXTERIOR DETAILS

SHEET NUMBER:
A0.8

WALL TYPES

INTERIOR NON-RATED WALLS

2.4 — RATING: NR ULI#:
ONE LAYER 5/8" GYPSUM BOARD ON 2-1/2" METAL FURRING STRIPS AT 16" O.C. (ONE SIDE) AND 3-5/8" METAL STUD (ONE SIDE) OF A 12" REINFORCED CONCRETE WALL.

3.1 — RATING: NR ULI#: N/A
ONE LAYER 5/8" GYPSUM BOARD ON ONE SIDE OF 3-5/8" METAL STUDS AT 16" O.C., EXTEND GYP. BD. 4" MIN. ABOVE CLG (EXTEND GYP. BD. TO DECK ABOVE. INSTALL ACOUSTIC INSULATION AT WALLS ADJACENT TO OFFICES, CONFERENCE, FITNESS, CORRIDORS, SURROUNDING BATHROOMS, AND MECHANICAL ROOMS)

3.2 — RATING: NR ULI#: N/A
ONE LAYER 5/8" GYPSUM BOARD ON EACH SIDE OF 3-5/8" METAL STUDS AT 16" O.C., W/ ACOUSTIC INSULATION, EXTEND FROM TOP OF DECK TO BOTTOM OF DECK ABOVE

3.3 — RATING: NR ULI#: N/A
SCHEDULED WALL TILE ON ONE LAYER 1/2" CEMENT BACKER BOARD ON ONE SIDE OF 3-5/8" METAL STUDS AT 16" O.C., W/ ACOUSTIC INSULATION, EXTEND FROM TOP OF DECK TO BOTTOM OF DECK ABOVE

3.4 — RATING: NR ULI#: N/A
SCHEDULED WALL TILE ON ONE LAYER 1/2" CEMENT BACKER BOARD (ONE SIDE) AND ONE LAYER 5/8" GYPSUM BOARD (ONE SIDE) OF 3-5/8" METAL STUDS AT 16" O.C., W/ ACOUSTIC INSULATION, EXTEND FROM TOP OF DECK TO BOTTOM OF DECK ABOVE

3.5 — RATING: NR ULI#: N/A
SCHEDULED WALL TILE ON ONE LAYER 1/2" CEMENT BACKER BOARD ON EACH SIDE OF 3-5/8" METAL STUDS AT 16" O.C., W/ ACOUSTIC INSULATION, EXTEND FROM TOP OF DECK TO BOTTOM OF DECK ABOVE

4.1 — RATING: NR ULI#: N/A
ONE LAYER 5/8" GYPSUM BOARD ON ONE SIDE OF 6" METAL STUDS AT 16" O.C., EXTEND GYP. BD. 4" MIN. ABOVE CLG (EXTEND GYP. BD. TO DECK ABOVE. INSTALL ACOUSTIC INSULATION AT WALLS ADJACENT TO OFFICES, CONFERENCE, FITNESS, CORRIDORS, SURROUNDING BATHROOMS, AND MECHANICAL ROOMS)

4.2 — RATING: NR ULI#: N/A
ONE LAYER 5/8" GYPSUM BOARD ON EACH SIDE OF 6" METAL STUDS AT 16" O.C., W/ ACOUSTIC INSULATION, EXTEND FROM TOP OF DECK TO BOTTOM OF DECK ABOVE

4.3 — RATING: NR ULI#: N/A
SCHEDULED WALL TILE ON ONE LAYER 1/2" CEMENT BACKER BOARD (ONE SIDE) AND ONE LAYER 5/8" GYPSUM BOARD (ONE SIDE) ON EACH SIDE OF 6" METAL STUDS AT 16" O.C., W/ ACOUSTIC INSULATION, EXTEND FROM TOP OF DECK TO BOTTOM OF DECK ABOVE

4.4 — RATING: NR ULI#: N/A
SCHEDULED WALL TILE ON ONE LAYER 1/2" CEMENT BACKER BOARD (ONE SIDE) AND ONE LAYER 5/8" GYPSUM BOARD (ONE SIDE) ON EACH SIDE OF 6" METAL STUDS AT 16" O.C., W/ ACOUSTIC INSULATION, EXTEND FROM TOP OF DECK TO BOTTOM OF DECK ABOVE

4.5 — RATING: NR ULI#: N/A
SCHEDULED WALL TILE ON ONE LAYER 1/2" CEMENT BACKER BOARD ON EACH SIDE OF 6" METAL STUDS AT 16" O.C., W/ ACOUSTIC INSULATION, EXTEND FROM TOP OF DECK TO BOTTOM OF DECK ABOVE

5.1 — RATING: NR ULI#: N/A
ONE LAYER 5/8" GYPSUM BOARD ON ONE SIDE OF 8" METAL STUDS AT 16" O.C., EXTEND GYP. BD. 4" MIN. ABOVE CLG (EXTEND GYP. BD. TO DECK ABOVE. INSTALL ACOUSTIC INSULATION AT WALLS ADJACENT TO OFFICES, CONFERENCE, FITNESS, CORRIDORS, SURROUNDING BATHROOMS, AND MECHANICAL ROOMS)

5.2 — RATING: NR ULI#: N/A
ONE LAYER 5/8" GYPSUM BOARD ON EACH SIDE OF 8" METAL STUDS AT 16" O.C., EXTEND GYP. BD. 4" MIN. ABOVE CLG (EXTEND GYP. BD. TO DECK ABOVE. INSTALL ACOUSTIC INSULATION AT WALLS ADJACENT TO OFFICES, CONFERENCE, FITNESS, CORRIDORS, SURROUNDING BATHROOMS, AND MECHANICAL ROOMS)

INTERIOR RATED WALLS

NOTE: GC TO REFER TO UL FOR REQUIREMENTS

1.0 — RATING: 1HR ULI#:
8" REINFORCED CONCRETE WALL

1.1 — RATING: 2HR ULI#:
8" REINFORCED CONCRETE WALL

1.2 — RATING: 2HR ULI#:
ONE LAYER 5/8" GYPSUM BOARD ON 1-1/2" METAL FURRING STRIPS AT 16" O.C. ON ONE SIDE OF 8" REINFORCED CONCRETE WALL.

1.3 — RATING: 1HR ULI#:
ONE LAYER 5/8" GYPSUM BOARD ON 1-1/2" METAL FURRING STRIPS AT 16" O.C. ON ONE SIDE OF 8" REINFORCED CONCRETE WALL.

1.4 — RATING: 1HR ULI#:
ONE LAYER 5/8" GYPSUM BOARD ON 1-1/2" METAL STUDS AT 16" O.C. ON EACH SIDE OF 8" REINFORCED CONCRETE WALL.

1.5 — RATING: 2HR ULI#:
ONE LAYER 5/8" GYPSUM BOARD ON 3-5/8" METAL STUDS AT 16" O.C. ON ONE SIDE OF 8" REINFORCED CONCRETE WALL.

1.6 — RATING: 2HR ULI#:
ONE LAYER 5/8" GYPSUM BOARD ON 3-5/8" METAL STUDS (ONE SIDE) AND 2-1/2" METAL FURRING STRIPS (ONE SIDE) AT 16" O.C. ON 8" REINFORCED CONCRETE WALL.

2.0 — RATING: 2HR ULI#:
12" REINFORCED CONCRETE WALL

2.1 — RATING: 2HR ULI#:
ONE LAYER 5/8" GYPSUM BOARD ON 2-1/2" METAL FURRING STRIPS AT 16" O.C. ON ONE SIDE OF 12" REINFORCED CONCRETE WALL.

2.2 — RATING: 2HR ULI#:
SCHEDULED WALL TILE ON ONE LAYER 1/2" CEMENT BACKER BOARD ON 2-1/2" METAL FURRING STRIPS AT 16" O.C. ON ONE SIDE OF 12" REINFORCED CONCRETE WALL.

2.3 — RATING: 2HR ULI#:
ONE LAYER 5/8" GYPSUM BOARD ON 3-5/8" METAL STUDS AT 16" O.C. ON ONE SIDE OF 12" REINFORCED CONCRETE REINFORCED WALL.

2.5 — RATING: 2HR ULI#:
ONE LAYER 5/8" GYPSUM BOARD ON 2-1/2" METAL FURRING STRIPS AT 16" O.C. (ONE SIDE) AND 3-5/8" METAL STUD (ONE SIDE) OF A 12" REINFORCED CONCRETE WALL.

2.6 — RATING: 2HR ULI#:
SCHEDULED WALL TILE ON ONE LAYER 1/2" CEMENT BACKER BOARD ON 2-1/2" METAL FURRING STRIPS AT 16" O.C. (ONE SIDE) AND ONE LAYER 5/8" GYPSUM BOARD ON 3-5/8" METAL STUD (ONE SIDE) OF A 12" REINFORCED CONCRETE WALL.

2.7 — RATING: 2HR ULI#:
ONE LAYER 5/8" GYPSUM BOARD ON 6" METAL STUDS AT 16" O.C. ON ONE SIDE OF 12" REINFORCED CONCRETE WALL.

3.6 — RATING: 1HR ULI#: U419
ONE LAYER 5/8" FIRE-RATED GYPSUM BOARD ON EACH SIDE OF 3-5/8" METAL STUDS AT 16" O.C. PER UL ASSEMBLY, W/ ACOUSTIC INSULATION, EXTEND FROM TOP OF DECK TO BOTTOM OF DECK ABOVE
NOTE: SEAL ALL EDGES AS REQUIRED BY RATING; FIRESTOP ALL PENETRATIONS.

3.7 — RATING: 1HR ULI#: U417
ONE LAYER 5/8" FIRE-RATED GYPSUM BOARD ON ONE SIDE AND ONE LAYER 1" SHAFT LINER ON ONE SIDE OF 2 1/2" METAL STUDS AT 16" O.C. PER UL ASSEMBLY, W/ ACOUSTIC INSULATION, EXTEND FROM TOP OF DECK TO BOTTOM OF DECK ABOVE
NOTE: SEAL ALL EDGES AS REQUIRED BY RATING; FIRESTOP ALL PENETRATIONS.

4.6 — RATING: 1HR ULI#: U417
ONE LAYER 5/8" FIRE-RATED GYPSUM BOARD ON ONE SIDE AND ONE LAYER 1" SHAFT LINER ON ONE SIDE OF 6" METAL STUDS AT 16" O.C. PER UL ASSEMBLY, W/ ACOUSTIC INSULATION, EXTEND FROM TOP OF DECK TO BOTTOM OF DECK ABOVE
NOTE: SEAL ALL EDGES AS REQUIRED BY RATING; FIRESTOP ALL PENETRATIONS.

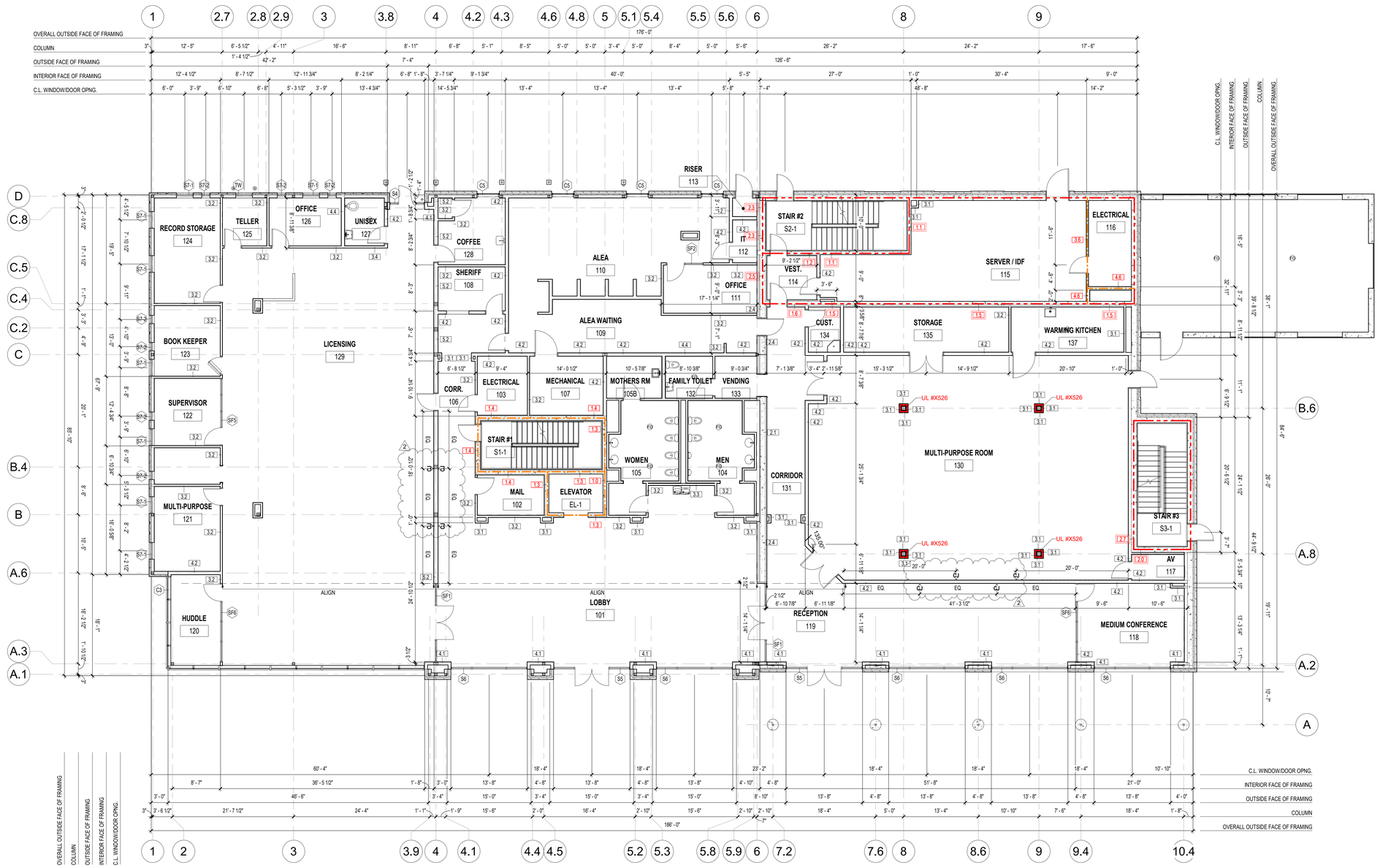

1 FIRST FLOOR DIMENSION PLAN
A2.1A SCALE: 1/8" = 1'-0"

STATE OF ALABAMA
2522 5471
5821 6438
WILLIAMS BLACKSTOCK ARCHITECTS
6191
REGISTERED ARCHITECT

HWY 280 SHELBY COUNTY SERVICES BUILDING
CONSTRUCTION BID PACKAGE
SHELBY COUNTY DEPARTMENT OF DEVELOPMENT SERVICES
19220 US HWY 280, BIRMINGHAM, AL 35242
19-040.00

ARCHITECT OF RECORD:
WILLIAMS· BLACKSTOCK
ARCHITECTS
ARCHITECTURE INTERIORS PLANNING
SUITE 200
2204 FIRST AVENUE SOUTH
BIRMINGHAM, ALABAMA 35233

KEY PLAN:

ISSUE DATE:
03/06/2020

REVISIONS

NO.	DATE	DESCRIPTION
1	03/13/2020	ADDENDUM #1
2	03/20/2020	ADDENDUM #2

PROJECT NUMBER:
19-040.00

DRAWING TITLE:
FIRST FLOOR DIMENSION PLAN

SHEET NUMBER:
A2.1A

WALL TYPES

INTERIOR NON-RATED WALLS

2.4 — RATING: NR ULI#:
ONE LAYER 5/8" GYPSUM BOARD ON 2-1/2" METAL FURRING STRIPS AT 16" O.C. (ONE SIDE) AND 3-5/8" METAL STUD (ONE SIDE) OF A 12" REINFORCED CONCRETE WALL.

3.1 — RATING: NR ULI#: N/A
ONE LAYER 5/8" GYPSUM BOARD ON ONE SIDE OF 3-5/8" METAL STUDS AT 16" O.C., EXTEND GYP. BD. 4" MIN. ABOVE CLG (EXTEND GYP. BD. TO DECK ABOVE. INSTALL ACOUSTIC INSULATION AT WALLS ADJACENT TO OFFICES, CONFERENCE, FITNESS, CORRIDORS, SURROUNDING BATHROOMS, AND MECHANICAL ROOMS)

3.2 — RATING: NR ULI#: N/A
ONE LAYER 5/8" GYPSUM BOARD ON EACH SIDE OF 3-5/8" METAL STUDS AT 16" O.C., W/ ACOUSTIC INSULATION, EXTEND FROM TOP OF DECK TO BOTTOM OF DECK ABOVE

3.3 — RATING: NR ULI#: N/A
SCHEDULED WALL TILE ON ONE LAYER 1/2" CEMENT BACKER BOARD ON ONE SIDE OF 3-5/8" METAL STUDS AT 16" O.C., W/ ACOUSTIC INSULATION, EXTEND FROM TOP OF DECK TO BOTTOM OF DECK ABOVE

3.4 — RATING: NR ULI#: N/A
SCHEDULED WALL TILE ON ONE LAYER 1/2" CEMENT BACKER BOARD (ONE SIDE) AND ONE LAYER 5/8" GYPSUM BOARD (ONE SIDE) OF 3-5/8" METAL STUDS AT 16" O.C., W/ ACOUSTIC INSULATION, EXTEND FROM TOP OF DECK TO BOTTOM OF DECK ABOVE

3.5 — RATING: NR ULI#: N/A
SCHEDULED WALL TILE ON ONE LAYER 1/2" CEMENT BACKER BOARD ON EACH SIDE OF 3-5/8" METAL STUDS AT 16" O.C., W/ ACOUSTIC INSULATION, EXTEND FROM TOP OF DECK TO BOTTOM OF DECK ABOVE

4.1 — RATING: NR ULI#: N/A
ONE LAYER 5/8" GYPSUM BOARD ON ONE SIDE OF 6" METAL STUDS AT 16" O.C., EXTEND GYP. BD. 4" MIN. ABOVE CLG (EXTEND GYP. BD. TO DECK ABOVE. INSTALL ACOUSTIC INSULATION AT WALLS ADJACENT TO OFFICES, CONFERENCE, FITNESS, CORRIDORS, SURROUNDING BATHROOMS, AND MECHANICAL ROOMS)

4.2 — RATING: NR ULI#: N/A
ONE LAYER 5/8" GYPSUM BOARD ON EACH SIDE OF 6" METAL STUDS AT 16" O.C., W/ ACOUSTIC INSULATION, EXTEND FROM TOP OF DECK TO BOTTOM OF DECK ABOVE

4.3 — RATING: NR ULI#: N/A
SCHEDULED WALL TILE ON ONE LAYER 1/2" CEMENT BACKER BOARD (ONE SIDE) AND ONE LAYER 5/8" GYPSUM BOARD (ONE SIDE) ON EACH SIDE OF 6" METAL STUDS AT 16" O.C., W/ ACOUSTIC INSULATION, EXTEND FROM TOP OF DECK TO BOTTOM OF DECK ABOVE

4.4 — RATING: NR ULI#: N/A
SCHEDULED WALL TILE ON ONE LAYER 1/2" CEMENT BACKER BOARD (ONE SIDE) AND ONE LAYER 5/8" GYPSUM BOARD (ONE SIDE) ON EACH SIDE OF 6" METAL STUDS AT 16" O.C., W/ ACOUSTIC INSULATION, EXTEND FROM TOP OF DECK TO BOTTOM OF DECK ABOVE

4.5 — RATING: NR ULI#: N/A
SCHEDULED WALL TILE ON ONE LAYER 1/2" CEMENT BACKER BOARD ON EACH SIDE OF 6" METAL STUDS AT 16" O.C., W/ ACOUSTIC INSULATION, EXTEND FROM TOP OF DECK TO BOTTOM OF DECK ABOVE

5.1 — RATING: NR ULI#: N/A
ONE LAYER 5/8" GYPSUM BOARD ON ONE SIDE OF 8" METAL STUDS AT 16" O.C., EXTEND GYP. BD. 4" MIN. ABOVE CLG (EXTEND GYP. BD. TO DECK ABOVE. INSTALL ACOUSTIC INSULATION AT WALLS ADJACENT TO OFFICES, CONFERENCE, FITNESS, CORRIDORS, SURROUNDING BATHROOMS, AND MECHANICAL ROOMS)

5.2 — RATING: NR ULI#: N/A
ONE LAYER 5/8" GYPSUM BOARD ON EACH SIDE OF 8" METAL STUDS AT 16" O.C., EXTEND GYP. BD. 4" MIN. ABOVE CLG (EXTEND GYP. BD. TO DECK ABOVE. INSTALL ACOUSTIC INSULATION AT WALLS ADJACENT TO OFFICES, CONFERENCE, FITNESS, CORRIDORS, SURROUNDING BATHROOMS, AND MECHANICAL ROOMS)

INTERIOR RATED WALLS

NOTE: GC TO REFER TO UL FOR REQUIREMENTS

1.0 — RATING: 1HR ULI#:
8" REINFORCED CONCRETE WALL

1.1 — RATING: 2HR ULI#:
8" REINFORCED CONCRETE WALL

1.2 — RATING: 2HR ULI#:
ONE LAYER 5/8" GYPSUM BOARD ON 1-1/2" METAL FURRING STRIPS AT 16" O.C. ON ONE SIDE OF 8" REINFORCED CONCRETE WALL.

1.3 — RATING: 1HR ULI#:
ONE LAYER 5/8" GYPSUM BOARD ON 1-1/2" METAL FURRING STRIPS AT 16" O.C. ON ONE SIDE OF 8" REINFORCED CONCRETE WALL.

1.4 — RATING: 1HR ULI#:
ONE LAYER 5/8" GYPSUM BOARD ON 1-1/2" METAL STUDS AT 16" O.C. ON EACH SIDE OF 8" REINFORCED CONCRETE WALL.

1.5 — RATING: 2HR ULI#:
ONE LAYER 5/8" GYPSUM BOARD ON 3-5/8" METAL STUDS AT 16" O.C. ON ONE SIDE OF 8" REINFORCED CONCRETE WALL.

1.6 — RATING: 2HR ULI#:
ONE LAYER 5/8" GYPSUM BOARD ON 3-5/8" METAL STUDS (ONE SIDE) AND 2-1/2" METAL FURRING STRIPS (ONE SIDE) AT 16" O.C. ON 8" REINFORCED CONCRETE WALL.

2.0 — RATING: 2HR ULI#:
12" REINFORCED CONCRETE WALL

2.1 — RATING: 2HR ULI#:
ONE LAYER 5/8" GYPSUM BOARD ON 2-1/2" METAL FURRING STRIPS AT 16" O.C. ON ONE SIDE OF 12" REINFORCED CONCRETE WALL.

2.2 — RATING: 2HR ULI#:
SCHEDULED WALL TILE ON ONE LAYER 1/2" CEMENT BACKER BOARD ON 2-1/2" METAL FURRING STRIPS AT 16" O.C. ON ONE SIDE OF 12" REINFORCED CONCRETE WALL.

2.3 — RATING: 2HR ULI#:
ONE LAYER 5/8" GYPSUM BOARD ON 3-5/8" METAL STUDS AT 16" O.C. ON ONE SIDE OF 12" REINFORCED CONCRETE REINFORCED WALL.

2.5 — RATING: 2HR ULI#:
ONE LAYER 5/8" GYPSUM BOARD ON 2-1/2" METAL FURRING STRIPS AT 16" O.C. (ONE SIDE) AND 3-5/8" METAL STUD (ONE SIDE) OF A 12" REINFORCED CONCRETE WALL.

2.6 — RATING: 2HR ULI#:
SCHEDULED WALL TILE ON ONE LAYER 1/2" CEMENT BACKER BOARD ON 2-1/2" METAL FURRING STRIPS AT 16" O.C. (ONE SIDE) AND ONE LAYER 5/8" GYPSUM BOARD ON 3-5/8" METAL STUD (ONE SIDE) OF A 12" REINFORCED CONCRETE WALL.

2.7 — RATING: 2HR ULI#:
ONE LAYER 5/8" GYPSUM BOARD ON 6" METAL STUDS AT 16" O.C. ON ONE SIDE OF 12" REINFORCED CONCRETE WALL.

3.6 — RATING: 1HR ULI#: U419
ONE LAYER 5/8" FIRE-RATED GYPSUM BOARD ON EACH SIDE OF 3-5/8" METAL STUDS AT 16" O.C. PER UL ASSEMBLY, W/ ACOUSTIC INSULATION, EXTEND FROM TOP OF DECK TO BOTTOM OF DECK ABOVE
NOTE: SEAL ALL EDGES AS REQUIRED BY RATING; FIRESTOP ALL PENETRATIONS.

3.7 — RATING: 1HR ULI#: U417
ONE LAYER 5/8" FIRE-RATED GYPSUM BOARD ON ONE SIDE AND ONE LAYER 1" SHAFT LINER ON ONE SIDE OF 2 1/2" METAL STUDS AT 16" O.C. PER UL ASSEMBLY, W/ ACOUSTIC INSULATION, EXTEND FROM TOP OF DECK TO BOTTOM OF DECK ABOVE
NOTE: SEAL ALL EDGES AS REQUIRED BY RATING; FIRESTOP ALL PENETRATIONS.

4.6 — RATING: 1HR ULI#: U417
ONE LAYER 5/8" FIRE-RATED GYPSUM BOARD ON ONE SIDE AND ONE LAYER 1" SHAFT LINER ON ONE SIDE OF 6" METAL STUDS AT 16" O.C. PER UL ASSEMBLY, W/ ACOUSTIC INSULATION, EXTEND FROM TOP OF DECK TO BOTTOM OF DECK ABOVE
NOTE: SEAL ALL EDGES AS REQUIRED BY RATING; FIRESTOP ALL PENETRATIONS.

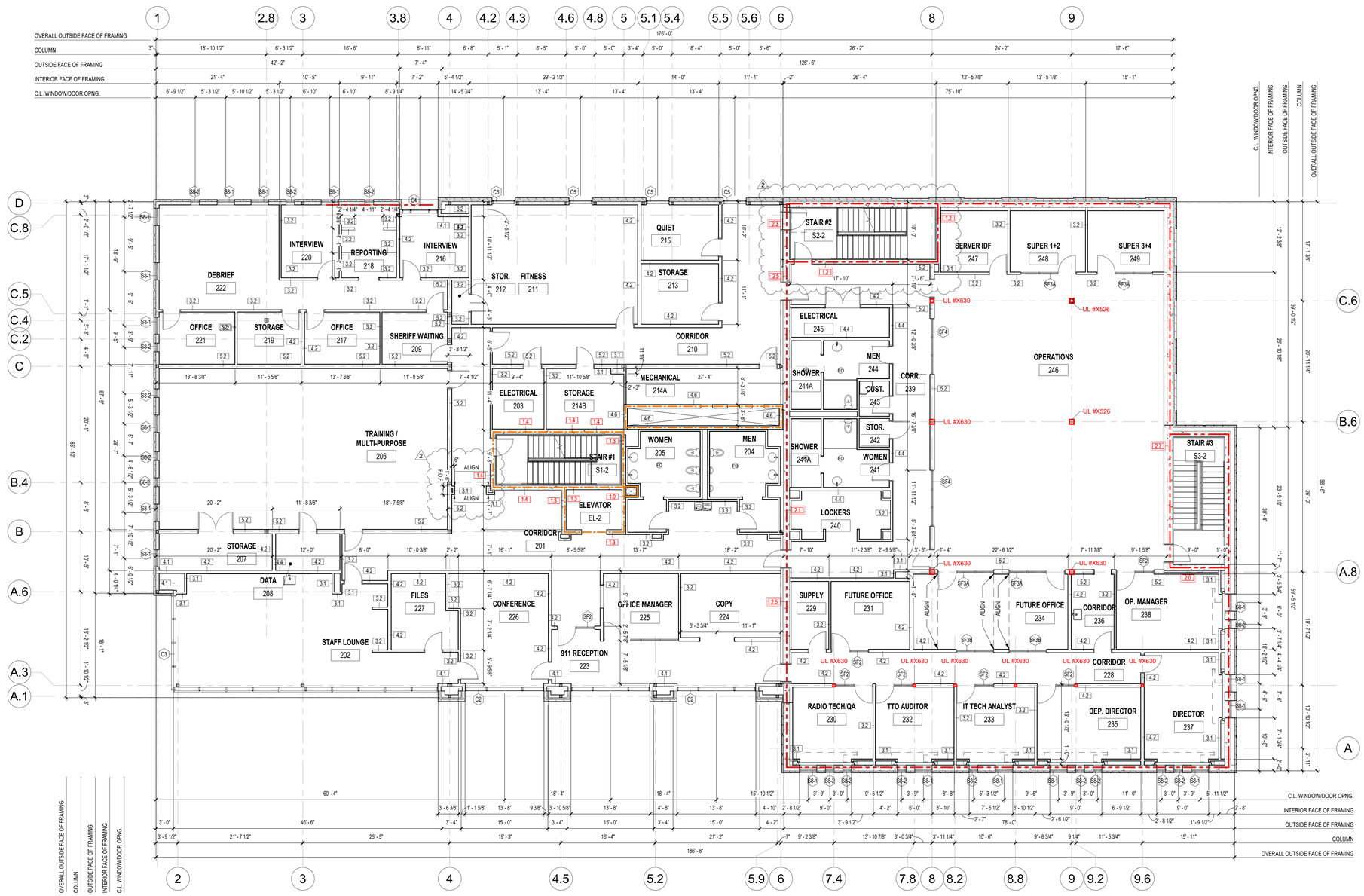

1 SECOND FLOOR DIMENSION PLAN
A2.2A SCALE: 1/8" = 1'-0"

STATE OF ALABAMA
2522 5471
5821 6438
WILLIAMS BLACKSTOCK ARCHITECTS
6191
REGISTERED ARCHITECT

HWY 280 SHELBY COUNTY SERVICES BUILDING
CONSTRUCTION BID PACKAGE
SHELBY COUNTY DEPARTMENT OF DEVELOPMENT SERVICES
19220 US HWY 280, BIRMINGHAM, AL 35242
19-040.00

ARCHITECT OF RECORD:
WILLIAMS· BLACKSTOCK
ARCHITECTS
ARCHITECTURE INTERIORS PLANNING
SUITE 200
2204 FIRST AVENUE SOUTH
BIRMINGHAM, ALABAMA 35233

KEY PLAN:

ISSUE DATE:
03/06/2020

REVISIONS

NO.	DATE	DESCRIPTION
1	03/13/2020	ADDENDUM #1
2	03/20/2020	ADDENDUM #2

PROJECT NUMBER:
19-040.00

DRAWING TITLE:
SECOND FLOOR DIMENSION PLAN

SHEET NUMBER:
A2.2A

WALL TYPES

INTERIOR NON-RATED WALLS

2.4 — RATING: NR ULI#:
ONE LAYER 5/8" GYPSUM BOARD ON 2-1/2" METAL FURRING STRIPS AT 16" O.C. (ONE SIDE) AND 3-5/8" METAL STUD (ONE SIDE) OF A 12" REINFORCED CONCRETE WALL.

3.1 — RATING: NR ULI#: N/A
ONE LAYER 5/8" GYPSUM BOARD ON ONE SIDE OF 3-5/8" METAL STUDS AT 16" O.C., EXTEND GYP. BD. 4" MIN. ABOVE CLG (EXTEND GYP. BD. TO DECK ABOVE. INSTALL ACOUSTIC INSULATION AT WALLS ADJACENT TO OFFICES, CONFERENCE, FITNESS, CORRIDORS, SURROUNDING BATHROOMS, AND MECHANICAL ROOMS)

3.2 — RATING: NR ULI#: N/A
ONE LAYER 5/8" GYPSUM BOARD ON EACH SIDE OF 3-5/8" METAL STUDS AT 16" O.C., W/ ACOUSTIC INSULATION, EXTEND FROM TOP OF DECK TO BOTTOM OF DECK ABOVE

3.3 — RATING: NR ULI#: N/A
SCHEDULED WALL TILE ON ONE LAYER 1/2" CEMENT BACKER BOARD ON ONE SIDE OF 3-5/8" METAL STUDS AT 16" O.C., W/ ACOUSTIC INSULATION, EXTEND FROM TOP OF DECK TO BOTTOM OF DECK ABOVE

3.4 — RATING: NR ULI#: N/A
SCHEDULED WALL TILE ON ONE LAYER 1/2" CEMENT BACKER BOARD (ONE SIDE) AND ONE LAYER 5/8" GYPSUM BOARD (ONE SIDE) OF 3-5/8" METAL STUDS AT 16" O.C., W/ ACOUSTIC INSULATION, EXTEND FROM TOP OF DECK TO BOTTOM OF DECK ABOVE

3.5 — RATING: NR ULI#: N/A
SCHEDULED WALL TILE ON ONE LAYER 1/2" CEMENT BACKER BOARD ON EACH SIDE OF 3-5/8" METAL STUDS AT 16" O.C., W/ ACOUSTIC INSULATION, EXTEND FROM TOP OF DECK TO BOTTOM OF DECK ABOVE

4.1 — RATING: NR ULI#: N/A
ONE LAYER 5/8" GYPSUM BOARD ON ONE SIDE OF 6" METAL STUDS AT 16" O.C., EXTEND GYP. BD. 4" MIN. ABOVE CLG (EXTEND GYP. BD. TO DECK ABOVE. INSTALL ACOUSTIC INSULATION AT WALLS ADJACENT TO OFFICES, CONFERENCE, FITNESS, CORRIDORS, SURROUNDING BATHROOMS, AND MECHANICAL ROOMS)

4.2 — RATING: NR ULI#: N/A
ONE LAYER 5/8" GYPSUM BOARD ON EACH SIDE OF 6" METAL STUDS AT 16" O.C., W/ ACOUSTIC INSULATION, EXTEND FROM TOP OF DECK TO BOTTOM OF DECK ABOVE

4.3 — RATING: NR ULI#: N/A
SCHEDULED WALL TILE ON ONE LAYER 1/2" CEMENT BACKER BOARD (ONE SIDE) AND ONE LAYER 5/8" GYPSUM BOARD (ONE SIDE) ON EACH SIDE OF 6" METAL STUDS AT 16" O.C., W/ ACOUSTIC INSULATION, EXTEND FROM TOP OF DECK TO BOTTOM OF DECK ABOVE

4.4 — RATING: NR ULI#: N/A
SCHEDULED WALL TILE ON ONE LAYER 1/2" CEMENT BACKER BOARD (ONE SIDE) AND ONE LAYER 5/8" GYPSUM BOARD (ONE SIDE) ON EACH SIDE OF 6" METAL STUDS AT 16" O.C., W/ ACOUSTIC INSULATION, EXTEND FROM TOP OF DECK TO BOTTOM OF DECK ABOVE

4.5 — RATING: NR ULI#: N/A
SCHEDULED WALL TILE ON ONE LAYER 1/2" CEMENT BACKER BOARD ON EACH SIDE OF 6" METAL STUDS AT 16" O.C., W/ ACOUSTIC INSULATION, EXTEND FROM TOP OF DECK TO BOTTOM OF DECK ABOVE

5.1 — RATING: NR ULI#: N/A
ONE LAYER 5/8" GYPSUM BOARD ON ONE SIDE OF 8" METAL STUDS AT 16" O.C., EXTEND GYP. BD. 4" MIN. ABOVE CLG (EXTEND GYP. BD. TO DECK ABOVE. INSTALL ACOUSTIC INSULATION AT WALLS ADJACENT TO OFFICES, CONFERENCE, FITNESS, CORRIDORS, SURROUNDING BATHROOMS, AND MECHANICAL ROOMS)

5.2 — RATING: NR ULI#: N/A
ONE LAYER 5/8" GYPSUM BOARD ON EACH SIDE OF 8" METAL STUDS AT 16" O.C., EXTEND GYP. BD. 4" MIN. ABOVE CLG (EXTEND GYP. BD. TO DECK ABOVE. INSTALL ACOUSTIC INSULATION AT WALLS ADJACENT TO OFFICES, CONFERENCE, FITNESS, CORRIDORS, SURROUNDING BATHROOMS, AND MECHANICAL ROOMS)

INTERIOR RATED WALLS

NOTE: GC TO REFER TO UL FOR REQUIREMENTS

1.0 — RATING: 1HR ULI#:
8" REINFORCED CONCRETE WALL

1.1 — RATING: 2HR ULI#:
8" REINFORCED CONCRETE WALL

1.2 — RATING: 2HR ULI#:
ONE LAYER 5/8" GYPSUM BOARD ON 1-1/2" METAL FURRING STRIPS AT 16" O.C. ON ONE SIDE OF 8" REINFORCED CONCRETE WALL.

1.3 — RATING: 1HR ULI#:
ONE LAYER 5/8" GYPSUM BOARD ON 1-1/2" METAL FURRING STRIPS AT 16" O.C. ON ONE SIDE OF 8" REINFORCED CONCRETE WALL.

1.4 — RATING: 1HR ULI#:
ONE LAYER 5/8" GYPSUM BOARD ON 1-1/2" METAL FURRING STRIPS AT 16" O.C. ON EACH SIDE OF 8" REINFORCED CONCRETE WALL.

1.5 — RATING: 2HR ULI#:
ONE LAYER 5/8" GYPSUM BOARD ON 3-5/8" METAL STUDS AT 16" O.C. ON ONE SIDE OF 8" REINFORCED CONCRETE WALL.

1.6 — RATING: 2HR ULI#:
ONE LAYER 5/8" GYPSUM BOARD ON 3-5/8" METAL STUDS (ONE SIDE) AND 2-1/2" METAL FURRING STRIPS (ONE SIDE) AT 16" O.C. ON 8" REINFORCED CONCRETE WALL.

2.0 — RATING: 2HR ULI#:
12" REINFORCED CONCRETE WALL

2.1 — RATING: 2HR ULI#:
ONE LAYER 5/8" GYPSUM BOARD ON 2-1/2" METAL FURRING STRIPS AT 16" O.C. ON ONE SIDE OF 12" REINFORCED CONCRETE WALL.

2.2 — RATING: 2HR ULI#:
SCHEDULED WALL TILE ON ONE LAYER 1/2" CEMENT BACKER BOARD ON 2-1/2" METAL FURRING STRIPS AT 16" O.C. ON ONE SIDE OF 12" REINFORCED CONCRETE WALL.

2.3 — RATING: 2HR ULI#:
ONE LAYER 5/8" GYPSUM BOARD ON 3-5/8" METAL STUDS AT 16" O.C. ON ONE SIDE OF 12" REINFORCED CONCRETE REINFORCED WALL.

2.5 — RATING: 2HR ULI#:
ONE LAYER 5/8" GYPSUM BOARD ON 2-1/2" METAL FURRING STRIPS AT 16" O.C. (ONE SIDE) AND 3-5/8" METAL STUD (ONE SIDE) OF A 12" REINFORCED CONCRETE WALL.

2.6 — RATING: 2HR ULI#:
SCHEDULED WALL TILE ON ONE LAYER 1/2" CEMENT BACKER BOARD ON 2-1/2" METAL FURRING STRIPS AT 16" O.C. (ONE SIDE) AND ONE LAYER 5/8" GYPSUM BOARD ON 3-5/8" METAL STUD (ONE SIDE) OF A 12" REINFORCED CONCRETE WALL.

2.7 — RATING: 2HR ULI#:
ONE LAYER 5/8" GYPSUM BOARD ON 6" METAL STUDS AT 16" O.C. ON ONE SIDE OF 12" REINFORCED CONCRETE WALL.

3.6 — RATING: 1HR ULI#: U419
ONE LAYER 5/8" FIRE-RATED GYPSUM BOARD ON EACH SIDE OF 3-5/8" METAL STUDS AT 16" O.C. PER UL ASSEMBLY, W/ ACOUSTIC INSULATION, EXTEND FROM TOP OF DECK TO BOTTOM OF DECK ABOVE
NOTE: SEAL ALL EDGES AS REQUIRED BY RATING; FIRESTOP ALL PENETRATIONS.

3.7 — RATING: 1HR ULI#: U417
ONE LAYER 5/8" FIRE-RATED GYPSUM BOARD ON ONE SIDE AND ONE LAYER 1" SHAFT LINER ON ONE SIDE OF 2 1/2" METAL STUDS AT 16" O.C. PER UL ASSEMBLY, W/ ACOUSTIC INSULATION, EXTEND FROM TOP OF DECK TO BOTTOM OF DECK ABOVE
NOTE: SEAL ALL EDGES AS REQUIRED BY RATING; FIRESTOP ALL PENETRATIONS.

4.6 — RATING: 1HR ULI#: U417
ONE LAYER 5/8" FIRE-RATED GYPSUM BOARD ON ONE SIDE AND ONE LAYER 1" SHAFT LINER ON ONE SIDE OF 6" METAL STUDS AT 16" O.C. PER UL ASSEMBLY, W/ ACOUSTIC INSULATION, EXTEND FROM TOP OF DECK TO BOTTOM OF DECK ABOVE
NOTE: SEAL ALL EDGES AS REQUIRED BY RATING; FIRESTOP ALL PENETRATIONS.

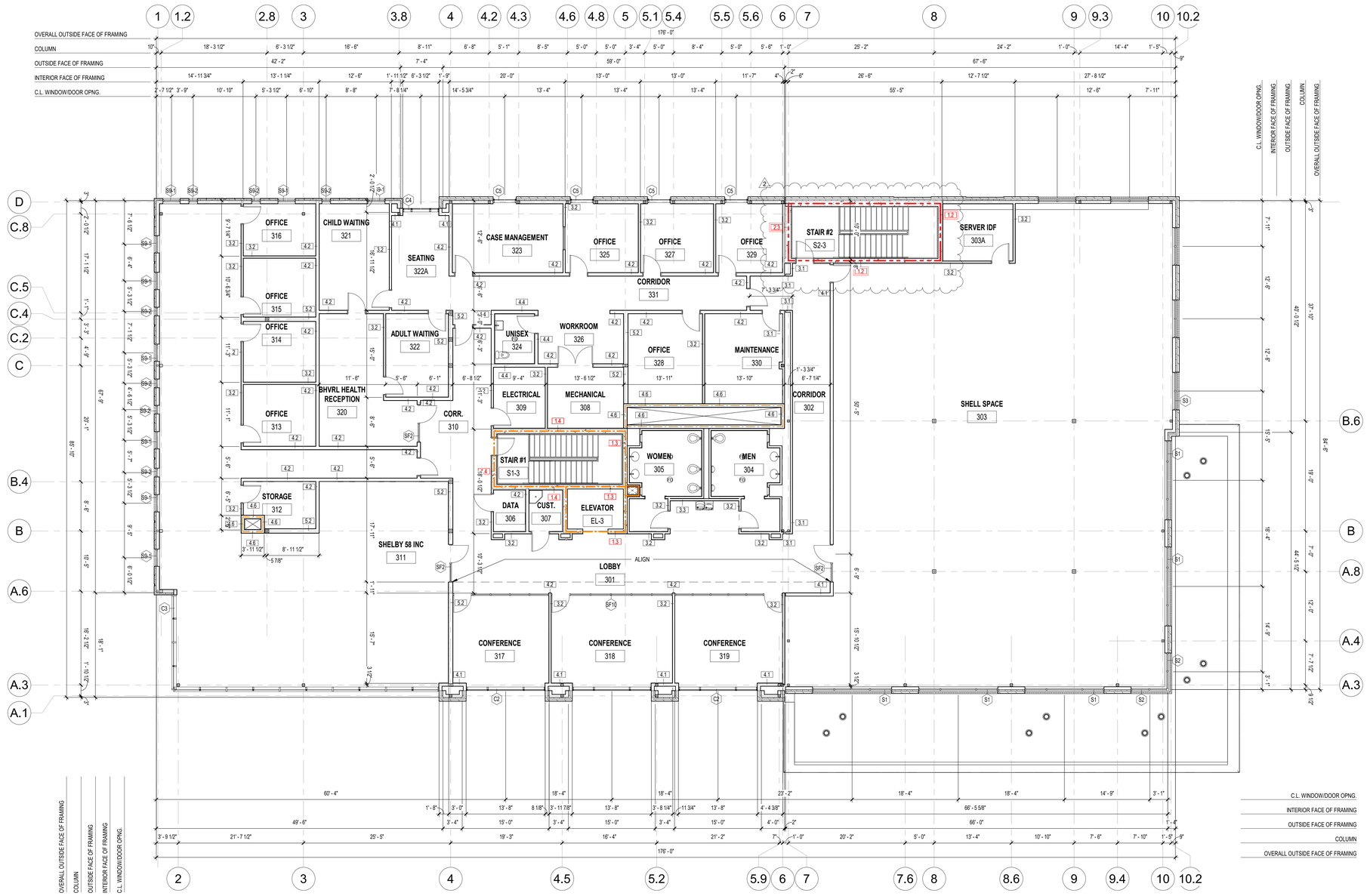

1 THIRD FLOOR DIMENSION PLAN
A2.3A SCALE: 1/8" = 1'-0"

STATE OF ALABAMA
2522 5471
5821 6438
WILLIAMS BLACKSTOCK ARCHITECTS
6191
REGISTERED ARCHITECT

HWY 280 SHELBY COUNTY SERVICES BUILDING
CONSTRUCTION BID PACKAGE
SHELBY COUNTY DEPARTMENT OF DEVELOPMENT SERVICES
19220 US HWY 280, BIRMINGHAM, AL 35242
19-040.00

ARCHITECT OF RECORD :
WILLIAMS· BLACKSTOCK
ARCHITECTS
ARCHITECTURE INTERIORS PLANNING
SUITE 200
2204 FIRST AVENUE SOUTH
BIRMINGHAM, ALABAMA 35233

KEY PLAN :

ISSUE DATE:
03/06/2020

REVISIONS

NO.	DATE	DESCRIPTION
1	03/13/2020	ADDENDUM #1
2	03/20/2020	ADDENDUM #2

PROJECT NUMBER:
19-040.00

DRAWING TITLE:
THIRD FLOOR DIMENSION PLAN

SHEET NUMBER:
A2.3A

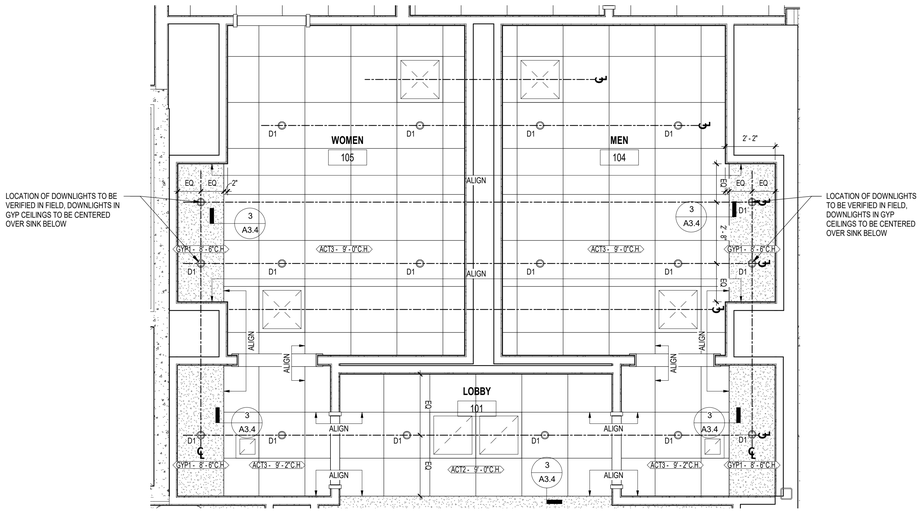

2 A3.1 ENLARGED RCP - LEVEL 1 TOILETS
SCALE: 3/8" = 1'-0"

LIGHTING FIXTURE LEGEND

CODE	DESCRIPTION	MANUFACTURER	MODEL	COLOR TEMP.	SYMBOL
CL	COVE LIGHT	TEMPO	C3R	3000K	
D1	4" LED DOWNLIGHT	GOTHAM	EVO4	3000K	⌀
D1S	4" LED DOWNLIGHT SHOWER APPLICATION	GOTHAM	EVO4	3000K	⌀
L1	1' X 4' LED FIXTURE	LITHONIA	BLT4	3000K	
L2	2' X 4' LED FIXTURE	LITHONIA	2BLT4	3000K	
L3	8' SUSPENDED LED FIXTURE	VODE	RACERAIL 107	3000K	
L4	8' LED LINEAR FIXTURE	VODE	ZIPTWO 707	3000K	
L5	4' LINEAR FIXTURE - CHAIN HUNG	LITHONIA	BLWP	3000K	
L5W	4' LINEAR FIXTURE - WALL MOUNTED				
L6	EXTERIOR RECESSED LINEAR LED FIXTURE	LED LINEAR	XOOLIGHT IP67	3000K	
L7	EXTERIOR SURFACE MOUNTED LED FIXTURE	LED LINEAR	SWP 1212	3000K	
L7W	EXTERIOR WALL MOUNTED LED FIXTURE				
L8	EXTERIOR SURFACE MOUNTED LED FIXTURE	LITHONIA	WDGE1	3000K	
P1	8' LINEAR BI-DIRECTIONAL LED PENDANT	LUMIUM	HASSIUM 1	3000K	
P1A	8' LINEAR **INDIRECT** LED PENDANT				
P2	50" DIA. DECORATIVE LED PENDANT	ULTRALIGHTS	19435-50	3000K	
RS-1	MANUAL SINGLE ROLLER SHADE	SEE FINISH LEGEND	SEE FINISH LEGEND	---	
RS-2	MANUAL DUAL ROLLER SHADE W/ BLACKOUT				
RS-3	MOTORIZED DUAL ROLLER SHADE W/ BLACKOUT				
SC	EXTERIOR SCONCE	LUMINIS	CL345	3000K	
UC	UNDERCOUNTER LIGHT	LITHONIA	UCEL	3000K	
WW	WALL WASH	ALW	LP1RWWT	3000K	
XC	EXIT SIGN	TBD	TBD	---	

MECHANICAL LEGEND

RETURN REGISTER
SUPPLY REGISTER
CEILING CASSETTE
ROUND HVAC AIR DIFFUSER
SLOT DIFFUSER
WALL MOUNTED INDOOR HVAC UNIT

NOTE: SEE MECHANICAL DRAWINGS FOR EQUIPMENT SPECIFICATIONS

CEILING LEGEND

PATTERN	CODE	DESCRIPTION	MANUFACTURER	MODEL	NOTES
	ACT1	ACOUSTICAL CEILING TILE	ARMSTRONG	LYRA #8356 9/16" TEGULAR EDGE SIZE: 48" x 48" x 1" SUSPENSION SYSTEM: SUPRAFINE 9/16" EXPOSED TEE	
	ACT2	ACOUSTICAL CEILING TILE	ARMSTRONG	OPTIMA #3355 9/16" TEGULAR EDGE SIZE: 24" x 24" x 1" SUSPENSION SYSTEM: SUPRAFINE 9/16" EXPOSED TEE	
	ACT3	ACOUSTICAL CEILING TILE	ARMSTRONG	DUNE #1775 9/16" TEGULAR EDGE SIZE: 24" x 24" x 5/8" SUSPENSION SYSTEM: SUPRAFINE 9/16" EXPOSED TEE	
	ACT4	ACOUSTICAL CEILING TILE	ARMSTRONG	FINE FISSURED #17288L 15/16" SQUARE EDGE SIZE: 24" x 24" x 3/4" SUSPENSION SYSTEM: 15/16" HEAVY DUTY PRELUDE XL (**BLACK WITH 360 DEGREE FINISH**)	LOCATED ABOVE WSC1, SEE SECTION 4/A3.1
	GYP1	GYPSUM BOARD	---	---	GYPSUM BOARD FINISH: LEVEL 4 FINISH: PNT1, SEE FINISH LEGEND
	GYP2	GYPSUM BOARD	---	---	GYPSUM BOARD FINISH: LEVEL 4 FINISH: VWC1, SEE FINISH LEGEND
	GYP3	GYPSUM BOARD - 2-HR FIRE RATED	---	---	GYPSUM BOARD FINISH: LEVEL 4 FINISH: PNT1, SEE FINISH LEGEND
	WSC1	WOOD SLAT CEILING	ARMSTRONG	WOODWORKS GRILLE MODEL #: 7095 BO (BACKER ONLY) SIZE: 1" SLAT WIDTH X 3 1/4" SLAT HEIGHT, 4 SLATS PER PANEL FINISH: WALNUT FINISH SUSPENSION SYSTEM: 15/16" HEAVY DUTY PRELUDE XL (BLACK WITH 360 DEGREE FINISH)	ACT4 LOCATED ABOVE WSC1, SEE DETAIL 4/A3.1
	EXP	NO DROPPED FINISHED CEILING - EXPOSED TO STRUCTURE AND MEP FP SYSTEMS ABOVE	N/A	N/A	WALLS ABOVE DATUM @ 9'-6" A.F.F. AND ALL EXPOSED TO VIEW MEP AND FP TO BE PRIMED AND PAINTED PNT-4, SEE FINISH LEGEND
	MW	MILLWORK CEILING	---	HPDL ON 3/4" MDF SUPSTRATE - SEE INTERIOR ELEVATIONS AND SECTION FOR FURTHER DETAIL AND DESCRIPTION.	**LOCATION:** STAFF LOUNGE 202 **NOTE:** GWB SOFFIT EXTENDS CONTINUOUSLY ABOVE MW1 CEILING

GENERAL CEILING NOTES

1. ANY SUBSTITUTIONS FOR THE LIGHT FIXTURES AS SPECIFIED SHALL BE SUBMITTED TO ARCHITECT DURING THE BID PROCESS FOR REVIEW AND APPROVAL. ARCHITECT TO HAVE A MIMIMUM OF 5 BUSINESS DAYS TO REVIEW ANY SUBSTITUTIONS.
2. UNLESS NOTED OR INDICATED OTHERWISE, ALL RECESSED LIGHT FIXTURES SHALL BE CENTERED IN 2X2 AND 4X4 ACOUSTICAL CEILING TILES.
3. UNLESS NOTED OR INDICATED OTHERWISE, ALL ACOUSTICAL CEILING GRIDS SHALL BE CENTERED IN ROOMS AS INDICATED.
4. GENERAL CONTRACTOR SHALL CONFIRM EXACT LOCATIONS FOR ALL LIGHT FIXTURES WITH ARCHITECT PRIOR TO ROUGH-INS OCCURRING.
5. EXACT HEIGHT OF SUSPENDED FIXTURES AND MOUNTING LOCATIONS TO BE COORDINATED WITH ARCHITECT PRIOR TO ROUGH-IN OCCURING. FIXTURES TO BE CENTERED OVER WORKSTATIONS / FURNITURE WHERE THEY OCCUR.
6. GENERAL CONTRACTOR SHALL PROVIDE LEVEL 4 PAINTED FINISH AT VERTICAL SURFACES OF PERIMETER OF CEILINGS AT DISTANCE ABOVE FACE OF FINISH AS REQUIRED FOR ALL STRUCTURE, DECK, MEP FP SYSTEMS VISIBLE FROM FLOOR LEVEL VIEW TO BE PAINTED FINISH .
7. PROVIDE PARTITION TYPE A3.2 EXTENDING TO DECK ABOVE AT ALL SOFFIT LOCATIONS. GYPSUM WALL BOARD NOT TO EXTEND MORE THAN 6" ABOVE FINISH CEILING SURFACE SEE CEILING SECTIONS FOR DETAIL.
8. GENERAL CONTRACTOR SHALL PROVIDE A COMPLETE PREENGINEEERED CEILING SYSTEM FOR ALL ARMSTRONG PRODUCTS SPECIFIED.
9. COORDINATE LIGHT FIXTURE SCHEDULE WITH ELECTRICAL DRAWINGS. NOTIFY IF ANY DISCREPANCIES TO RESOLVE.
10. ALL MATERIALS THAT ARE LOCATED IN THE HVAC RETURN CEILING PLENUM MUST BE NON-COMBUSTIBLE, LISTED AND LABELED HAVING A FLAME SPREAD INDEX OF NOT MORE THAN 25 AND A SMOKE-DEVELOPED INDEX OF NOT MORE THAN 50 WHEN TESTED IN ACCORDANCE WITH ASTM E 84 4OR UL T23.
11. ALL LIGHT FIXTURE TO HAVE THE CAPABILITY FOR LIGHT LEVELS AND COLOR TEMPERATURE TO BE ADJUSTABLE ON SITE.

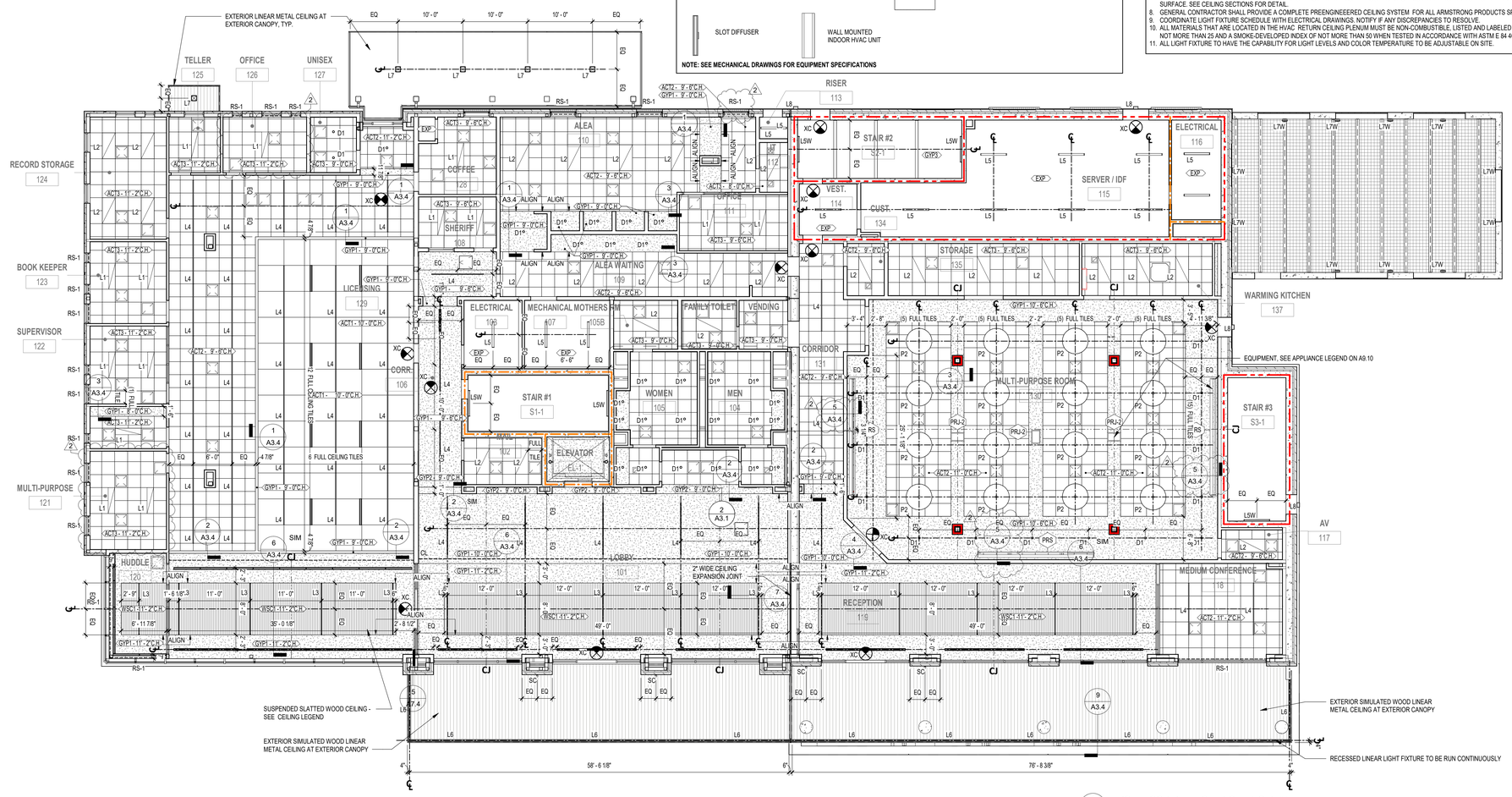

1 A3.1 FIRST FLOOR REFLECTED CEILING PLAN
SCALE: 1/8" = 1'-0"

STATE OF ALABAMA
2522 5471
5821 6438
WILLIAMS BLACKSTOCK ARCHITECTS
6191
REGISTERED ARCHITECT

HWY 280 SHELBY COUNTY SERVICES BUILDING
CONSTRUCTION BID PACKAGE
SHELBY COUNTY DEPARTMENT OF DEVELOPMENT SERVICES
19220 US HWY 280, BIRMINGHAM, AL 35242
19-040.00

ARCHITECT OF RECORD :
WILLIAMS· BLACKSTOCK
ARCHITECTS
ARCHITECTURE INTERIORS PLANNING
SUITE 200
2204 FIRST AVENUE SOUTH
BIRMINGHAM, ALABAMA 35233

KEY PLAN :

ISSUE DATE:
03/06/2020

REVISIONS

NO.	DATE	DESCRIPTION
1	03/13/2020	ADDENDUM #1
2	03/20/2020	ADDENDUM #2

PROJECT NUMBER:
19-040.00

DRAWING TITLE:
FIRST FLOOR REFLECTED CEILING PLAN

SHEET NUMBER:
A3.1

LIGHTING FIXTURE LEGEND

CODE	DESCRIPTION	MANUFACTURER	MODEL	COLOR TEMP.	SYMBOL
CL	COVE LIGHT	TEMPO	C3R	3000K	
D1	4" LED DOWNLIGHT	GOTHAM	EVO4	3000K	
D1S	4" LED DOWNLIGHT SHOWER APPLICATION	GOTHAM	EVO4	3000K	
L1	1' X 4' LED FIXTURE	LITHONIA	BLT4	3000K	
L2	2' X 4' LED FIXTURE	LITHONIA	2BLT4	3000K	
L3	8' SUSPENDED LED FIXTURE	VODE	RACERAIL 107	3000K	
L4	8' LED LINEAR FIXTURE	VODE	ZIPTWO 707	3000K	
L5	4' LINEAR FIXTURE - CHAIN HUNG	LITHONIA	BLWP	3000K	
L5W	4' LINEAR FIXTURE - WALL MOUNTED				
2 L6	EXTERIOR RECESSED LINEAR LED FIXTURE	LED LINEAR	XOOLIGHT IP67	3000K	
L7	EXTERIOR SURFACE MOUNTED LED FIXTURE	LED LINEAR	SWP 1212	3000K	
L7W	EXTERIOR WALL MOUNTED LED FIXTURE				
L8	EXTERIOR SURFACE MOUNTED LED FIXTURE	LITHONIA	WDGE1	3000K	
P1	8' LINEAR BI-DIRECTIONAL LED PENDANT	LUMIUM	HASSIUM 1	3000K	
P1A	8' LINEAR **INDIRECT** LED PENDANT				
P2	50" DIA. DECORATIVE LED PENDANT	ULTRALIGHTS	19435-50	3000K	
RS-1	MANUAL SINGLE ROLLER SHADE	SEE FINISH LEGEND	SEE FINISH LEGEND	---	
RS-2	MANUAL DUAL ROLLER SHADE W/ BLACKOUT				
RS-3	MOTORIZED DUAL ROLLER SHADE W/ BLACKOUT				
SC	EXTERIOR SCONCE	LUMINIS	CL345	3000K	
UC	UNDERCOUNTER LIGHT	LITHONIA	UCEL	3000K	
WW	WALL WASH	ALW	LP1RWWT	3000K	
XC	EXIT SIGN	TBD	TBD	---	

MECHANICAL LEGEND

RETURN REGISTER

SUPPLY REGISTER

CEILING CASSETTE

ROUND HVAC AIR DIFFUSER

SLOT DIFFUSER

WALL MOUNTED INDOOR HVAC UNIT

NOTE: SEE MECHANICAL DRAWINGS FOR EQUIPMENT SPECIFICATIONS

CEILING LEGEND

PATTERN	CODE	DESCRIPTION	MANUFACTURER	MODEL	NOTES
	ACT1	ACOUSTICAL CEILING TILE	ARMSTRONG	LYRA #8356 9/16" TEGULAR EDGE SIZE: 48" x 48" x 1" SUSPENSION SYSTEM: SUPRAFINE 9/16" EXPOSED TEE	
	ACT2	ACOUSTICAL CEILING TILE	ARMSTRONG	OPTIMA #3355 9/16" TEGULAR EDGE SIZE: 24" x 24" x 1" SUSPENSION SYSTEM: SUPRAFINE 9/16" EXPOSED TEE	
	ACT3	ACOUSTICAL CEILING TILE	ARMSTRONG	DUNE #1775 9/16" TEGULAR EDGE SIZE: 24" x 24" x 5/8" SUSPENSION SYSTEM: SUPRAFINE 9/16" EXPOSED TEE	
	ACT4	ACOUSTICAL CEILING TILE	ARMSTRONG	FINE FISSURED #1728BL 15/16" SQUARE EDGE SIZE: 24" x 24" x 3/4" SUSPENSION SYSTEM: 15/16" HEAVY DUTY PRELUDE XL (**BLACK WITH 360 DEGREE FINISH**)	LOCATED ABOVE WSC1, SEE SECTION 4/A3.1
	GYP1	GYPSUM BOARD	---	---	GYPSUM BOARD FINISH :LEVEL 4 FINISH: PNT1, SEE FINISH LEGEND
	GYP2	GYPSUM BOARD	---	---	GYPSUM BOARD FINISH: LEVEL 4 FINISH: VWC1, SEE FINISH LEGEND
	GYP3	GYPSUM BOARD - 2-HR FIRE RATED	---	---	GYPSUM BOARD FINISH: LEVEL 4 FINISH: PNT1, SEE FINISH LEGEND
	WSC1	WOOD SLAT CEILING	ARMSTRONG	WOODWORKS GRILLE MODEL #: 7095 BO (BACKER ONLY) SIZE: 1" SLAT WIDTH X 3 1/4" SLAT HEIGHT, 4 SLATS PER PANEL FINISH: WALNUT FINISH SUSPENSION SYSTEM: 15/16" HEAVY DUTY PRELUDE XL (BLACK WITH 360 DEGREE FINISH)	ACT4 LOCATED ABOVE WSC1, SEE DETAIL 4/A3.1
	EXP	NO DROPPED FINISHED CEILING - EXPOSED TO STRUCTURE AND MEP FP SYSTEMS ABOVE	N/A	N/A	WALLS ABOVE DATUM @ 9'-6" A.F.F. AND ALL EXPOSED TO VIEW MEP AND FP TO BE PRIMED AND PAINTED PNT-4, SEE FINISH LEGEND
	MW	MILLWORK CEILING	---	HPDL ON 3/4" MDF SUPSTRATE - SEE INTERIOR ELEVATIONS AND SECTION FOR FURTHER DETAIL AND DESCRIPTION	**LOCATION:** STAFF LOUNGE 202 **NOTE:** GWB SOFFIT EXTENDS CONTINUOUSLY ABOVE MW1 CEILING

GENERAL CEILING NOTES

1. ANY SUBSTITUTIONS FOR THE LIGHT FIXTURES AS SPECIFIED SHALL BE SUBMITTED TO ARCHITECT DURING THE BID PROCESS FOR REVIEW AND APPROVAL. ARCHITECT TO HAVE A MINIMUM OF 5 BUSINESS DAYS TO REVIEW ANY SUBSTITUTIONS.
2. UNLESS NOTED OR INDICATED OTHERWISE, ALL RECESSED LIGHT FIXTURES SHALL BE CENTERED IN 2X2 AND 4X4 ACOUSTICAL CEILING TILES.
3. UNLESS NOTED OR INDICATED OTHERWISE, ALL ACOUSTICAL CEILING GRIDS SHALL BE CENTERED IN ROOMS AS INDICATED.
4. GENERAL CONTRACTOR SHALL CONFIRM EXACT LOCATIONS FOR ALL LIGHT FIXTURES WITH ARCHITECT PRIOR TO ROUGH-INS OCCURRING.
5. EXACT HEIGHT OF SUSPENDED FIXTURES AND MOUNTING LOCATIONS TO BE COORDINATED WITH ARCHITECT PRIOR TO ROUGH-IN OCCURING, FIXTURES TO BE CENTERED OVER WORKSTATIONS / FURNITURE WHERE THEY OCCUR.
6. GENERAL CONTRACTOR SHALL PROVIDE LEVEL 4 PAINTED FINISH AT VERTICAL SURFACES OF PERIMETER OF CEILINGS AT DISTANCE ABOVE FACE OF FINISH AS REQUIRED FOR ALL STRUCTURE, DECK, MEP FP SYSTEMS VISIBLE FROM FLOOR LEVEL VIEW TO BE PAINTED FINISH.
7. PROVIDE PARTITION TYPE A3.2 EXTENDING TO DECK ABOVE AT ALL SOFFIT LOCATIONS. GYPSUM WALL BOARD NOT TO EXTEND MORE THAN 6" ABOVE FINISH CEILING SURFACE. SEE CEILING SECTIONS FOR DETAIL.
8. GENERAL CONTRACTOR SHALL PROVIDE A COMPLETE PREENGINEEERED CEILING SYSTEM FOR ALL ARMSTRONG PRODUCTS SPECIFIED.
9. COORDINATE LIGHT FIXTURE SCHEDULE WITH ELECTRICAL DRAWINGS. NOTIFY IF ANY DISCREPANCIES TO RESOLVE.
10. ALL MATERIALS THAT ARE LOCATED IN THE HVAC RETURN CEILING PLENUM MUST BE NON-COMBUSTIBLE, LISTED AND LABELED HAVING A FLAME SPREAD INDEX OF NOT MORE THAN 25 AND A SMOKE-DEVELOPED INDEX OF NOT MORE THAN 50 WHEN TESTED IN ACCORDANCE WITH ASTM E 84 4OR UL TZ3.
11. ALL LIGHT FIXTURE TO HAVE THE CAPABILITY FOR LIGHT LEVELS AND COLOR TEMPERATURE TO BE ADJUSTABLE ON SITE.

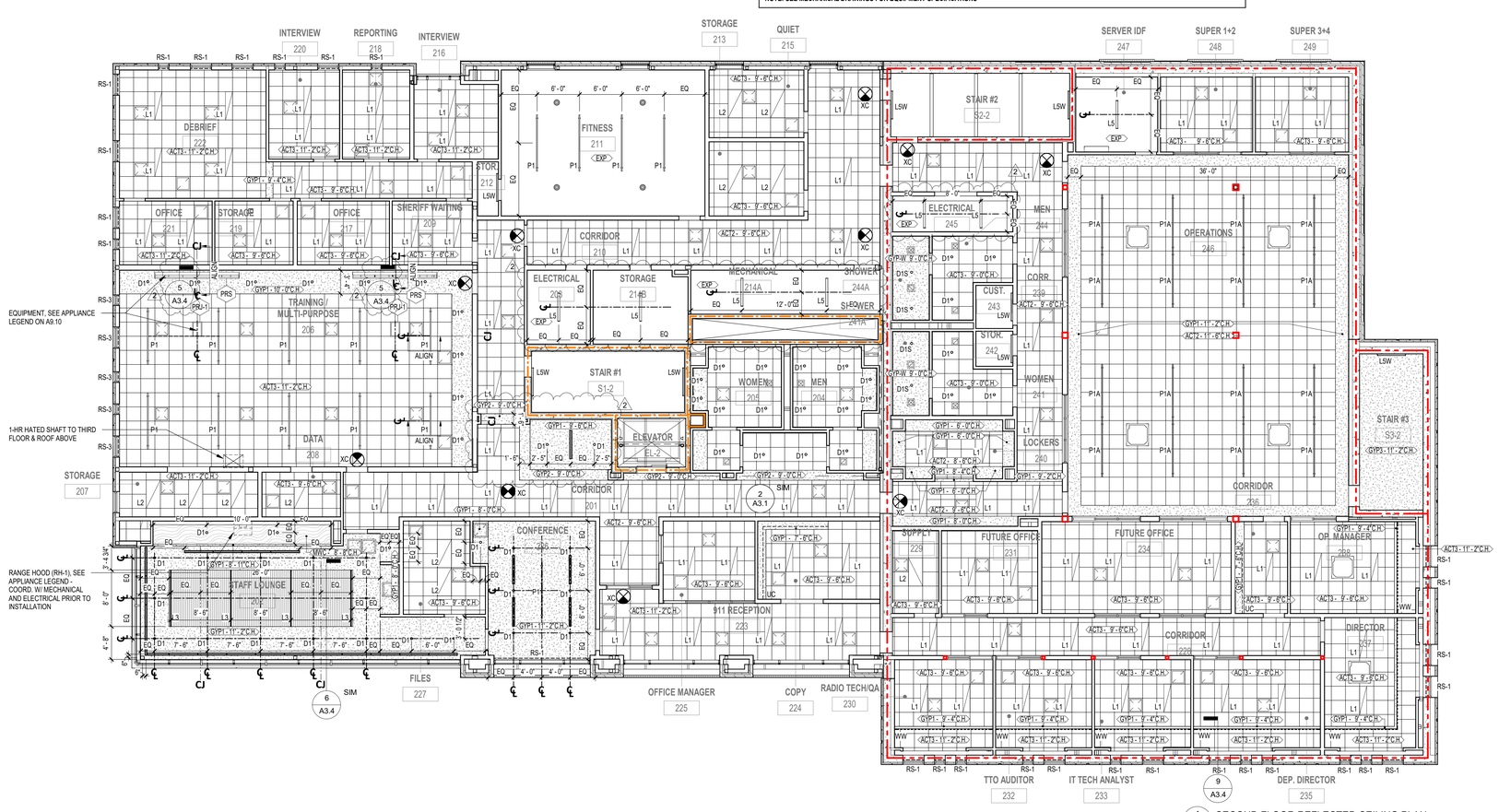

1 A3.2 SECOND FLOOR REFLECTED CEILING PLAN
SCALE: 1/8" = 1'-0"

STATE OF ALABAMA
2522 5471
5821 6438
WILLIAMS BLACKSTOCK ARCHITECTS
6191
REGISTERED ARCHITECT

HWY 280 SHELBY COUNTY SERVICES BUILDING
CONSTRUCTION BID PACKAGE
SHELBY COUNTY DEPARTMENT OF DEVELOPMENT SERVICES
19220 US HWY 280, BIRMINGHAM, AL 35242
19-040.00

ARCHITECT OF RECORD :
WILLIAMS· BLACKSTOCK
ARCHITECTS
ARCHITECTURE INTERIORS PLANNING
SUITE 200
2204 FIRST AVENUE SOUTH
BIRMINGHAM, ALABAMA 35233

KEY PLAN :

ISSUE DATE:
03/06/2020

REVISIONS

NO.	DATE	DESCRIPTION
1	03/13/2020	ADDENDUM #1
2	03/20/2020	ADDENDUM #2

PROJECT NUMBER:
19-040.00

DRAWING TITLE:
SECOND FLOOR REFLECTED CEILING PLAN

SHEET NUMBER:
A3.2

LIGHTING FIXTURE LEGEND

CODE	DESCRIPTION	MANUFACTURER	MODEL	COLOR TEMP.	SYMBOL
CL	COVE LIGHT	TEMPO	C3R	3000K	
D1	4" LED DOWNLIGHT	GOTHAM	EVO4	3000K	
D1S	4" LED DOWNLIGHT SHOWER APPLICATION	GOTHAM	EVO4	3000K	
L1	1' X 4' LED FIXTURE	LITHONIA	BLT4	3000K	
L2	2' X 4' LED FIXTURE	LITHONIA	2BLT4	3000K	
L3	8' SUSPENDED LED FIXTURE	VODE	RACERAIL 107	3000K	
L4	8' LED LINEAR FIXTURE	VODE	ZIPTWO 707	3000K	
L5	4' LINEAR FIXTURE - CHAIN HUNG	LITHONIA	BLWP	3000K	
L5W	4' LINEAR FIXTURE - WALL MOUNTED				
L6	EXTERIOR RECESSED LINEAR LED FIXTURE	LED LINEAR	XOOLIGHT IP67	3000K	
L7	EXTERIOR SURFACE MOUNTED LED FIXTURE	LED LINEAR	SWP 1212	3000K	
L7W	EXTERIOR WALL MOUNTED LED FIXTURE				
L8	EXTERIOR SURFACE MOUNTED LED FIXTURE	LITHONIA	WDGE1	3000K	
P1	8' LINEAR BI-DIRECTIONAL LED PENDANT	LUMIUM	HASSIUM 1	3000K	
P1A	8' LINEAR **INDIRECT** LED PENDANT				
P2	50" DIA. DECORATIVE LED PENDANT	ULTRALIGHTS	19435-50	3000K	
RS-1	MANUAL SINGLE ROLLER SHADE	SEE FINISH LEGEND	SEE FINISH LEGEND	---	
RS-2	MANUAL DUAL ROLLER SHADE W/ BLACKOUT				
RS-3	MOTORIZED DUAL ROLLER SHADE W/ BLACKOUT				
SC	EXTERIOR SCONCE	LUMINIS	CL345	3000K	
UC	UNDERCOUNTER LIGHT	LITHONIA	UCEL	3000K	
WW	WALL WASH	ALW	LP1RWWT	3000K	
XC	EXIT SIGN	TBD	TBD	---	

MECHANICAL LEGEND

RETURN REGISTER

SUPPLY REGISTER

CEILING CASSETTE

ROUND HVAC AIR DIFFUSER

SLOT DIFFUSER

WALL MOUNTED INDOOR HVAC UNIT

NOTE: SEE MECHANICAL DRAWINGS FOR EQUIPMENT SPECIFICATIONS

CEILING LEGEND

PATTERN	CODE	DESCRIPTION	MANUFACTURER	MODEL	NOTES
	ACT1	ACOUSTICAL CEILING TILE	ARMSTRONG	LYRA #8356 9/16" TEGULAR EDGE SIZE: 48" x 48" x 1" SUSPENSION SYSTEM: SUPRAFINE 9/16" EXPOSED TEE	
	ACT2	ACOUSTICAL CEILING TILE	ARMSTRONG	OPTIMA #3355 9/16" TEGULAR EDGE SIZE: 24" x 24" x 1" SUSPENSION SYSTEM: SUPRAFINE 9/16" EXPOSED TEE	
	ACT3	ACOUSTICAL CEILING TILE	ARMSTRONG	DUNE #1775 9/16" TEGULAR EDGE SIZE: 24" x 24" x 5/8" SUSPENSION SYSTEM: SUPRAFINE 9/16" EXPOSED TEE	
	ACT4	ACOUSTICAL CEILING TILE	ARMSTRONG	FINE FISSURED #1728BL 15/16" SQUARE EDGE SIZE: 24" x 24" x 3/4" SUSPENSION SYSTEM: 15/16" HEAVY DUTY PRELUDE XL (**BLACK WITH 360 DEGREE FINISH**)	LOCATED ABOVE WSC1, SEE SECTION 4/A3.1
	GYP1	GYPSUM BOARD	---	---	GYPSUM BOARD FINISH: LEVEL 4 FINISH: PNT1, SEE FINISH LEGEND
	GYP2	GYPSUM BOARD	---	---	GYPSUM BOARD FINISH: LEVEL 4 FINISH: VWC1, SEE FINISH LEGEND
	GYP3	GYPSUM BOARD - 2-HR FIRE RATED	---	---	GYPSUM BOARD FINISH: LEVEL 4 FINISH: PNT1, SEE FINISH LEGEND
	WSC1	WOOD SLAT CEILING	ARMSTRONG	WOODWORKS GRILLE MODEL #: 7095 BO (BACKER ONLY) SIZE: 1" SLAT WIDTH X 3 1/4" SLAT HEIGHT, 4 SLATS PER PANEL FINISH: WALNUT FINISH SUSPENSION SYSTEM: 15/16" HEAVY DUTY PRELUDE XL (BLACK WITH 360 DEGREE FINISH)	ACT4 LOCATED ABOVE WSC1, SEE DETAIL 4/A3.1
	EXP	NO DROPPED FINISHED CEILING - EXPOSED TO STRUCTURE AND MEP FP SYSTEMS ABOVE	N/A	N/A	WALLS ABOVE DATUM @ 9'-6" A.F.F. AND ALL EXPOSED TO VIEW MEP AND FP TO BE PRIMED AND PAINTED PNT-4, SEE FINISH LEGEND
	MW	MILLWORK CEILING	---	HPDL ON 3/4" MDF SUPSTRATE - SEE INTERIOR ELEVATIONS AND SECTION FOR FURTHER DETAIL AND DESCRIPTION.	**LOCATION:** STAFF LOUNGE 202 **NOTE:** GWB SOFFIT EXTENDS CONTINUOUSLY ABOVE MW1 CEILING

GENERAL CEILING NOTES

1. ANY SUBSTITUTIONS FOR THE LIGHT FIXTURES AS SPECIFIED SHALL BE SUBMITTED TO ARCHITECT DURING THE BID PROCESS FOR REVIEW AND APPROVAL. ARCHITECT TO HAVE A MINIMUM OF 5 BUSINESS DAYS TO REVIEW ANY SUBSTITUTIONS.
2. UNLESS NOTED OR INDICATED OTHERWISE, ALL RECESSED LIGHT FIXTURES SHALL BE CENTERED IN 2X2 AND 4X4 ACOUSTICAL CEILING TILES.
3. UNLESS NOTED OR INDICATED OTHERWISE, ALL ACOUSTICAL CEILING GRIDS SHALL BE CENTERED IN ROOMS AS INDICATED.
4. GENERAL CONTRACTOR SHALL CONFIRM EXACT LOCATIONS FOR ALL LIGHT FIXTURES WITH ARCHITECT PRIOR TO ROUGH-INS OCCURRING.
5. EXACT HEIGHT OF SUSPENDED FIXTURES AND MOUNTING LOCATIONS TO BE COORDINATED WITH ARCHITECT PRIOR TO ROUGH-IN OCCURING. FIXTURES TO BE CENTERED OVER WORKSTATIONS / FURNITURE WHERE THEY OCCUR.
6. GENERAL CONTRACTOR SHALL PROVIDE LEVEL 4 PAINTED FINISH AT VERTICAL SURFACES OF PERIMETER OF CEILINGS AT DISTANCE ABOVE FACE OF FINISH AS REQUIRED FOR ALL STRUCTURE, DECK, MEP FP SYSTEMS VISIBLE FROM FLOOR LEVEL VIEW TO BE PAINTED FINISH .
7. PROVIDE PARTITION TYPE A3.2 EXTENDING TO DECK ABOVE AT ALL SOFFIT LOCATIONS. GYPSUM WALL BOARD NOT TO EXTEND MORE THAN 6" ABOVE FINISH CEILING SURFACE. SEE CEILING SECTIONS FOR DETAIL.
8. GENERAL CONTRACTOR SHALL PROVIDE A COMPLETE PREENGINEEERED CEILING SYSTEM. FOR ALL ARMSTRONG PRODUCTS SPECIFIED.
9. COORDINATE LIGHT FIXTURE SCHEDULE WITH ELECTRICAL DRAWINGS. NOTIFY IF ANY DISCREPANCIES TO RESOLVE.
10. ALL MATERIALS THAT ARE LOCATED IN THE HVAC RETURN CEILING PLENUM MUST BE NON-COMBUSTIBLE, LISTED AND LABELED HAVING A FLAME SPREAD INDEX OF NOT MORE THAN 25 AND A SMOKE-DEVELOPED INDEX OF NOT MORE THAN 50 WHEN TESTED IN ACCORDANCE WITH ASTM E 84 4OR UL T23.
11. ALL LIGHT FIXTURE TO HAVE THE CAPABILITY FOR LIGHT LEVELS AND COLOR TEMPERATURE TO BE ADJUSTABLE ON SITE.

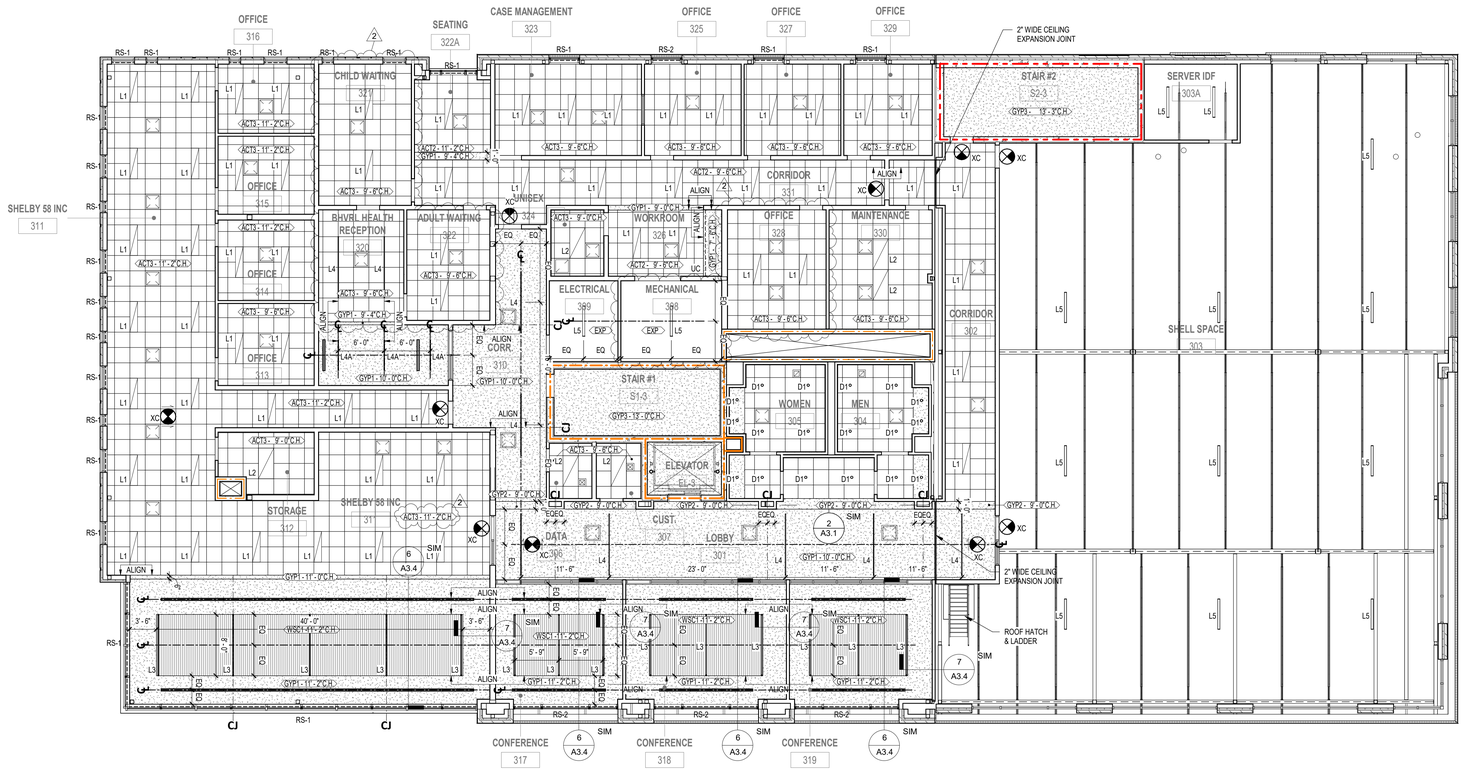

1 A3.3 THIRD FLOOR REFLECTED CEILING PLAN
SCALE: 1/8" = 1'-0"

STATE OF ALABAMA
2522 5471
5821 6438
WILLIAMS BLACKSTOCK ARCHITECTS
6191
REGISTERED ARCHITECT

HWY 280 SHELBY COUNTY SERVICES BUILDING
CONSTRUCTION BID PACKAGE
SHELBY COUNTY DEPARTMENT OF DEVELOPMENT SERVICES
19220 US HWY 280, BIRMINGHAM, AL 35242
19-040.00

ARCHITECT OF RECORD :
WILLIAMS· BLACKSTOCK
ARCHITECTS
ARCHITECTURE INTERIORS PLANNING
SUITE 200
2204 FIRST AVENUE SOUTH
BIRMINGHAM, ALABAMA 35233

KEY PLAN :

ISSUE DATE:
03/06/2020

REVISIONS

NO.	DATE	DESCRIPTION
1	03/13/2020	ADDENDUM #1
2	03/20/2020	ADDENDUM #2

PROJECT NUMBER:
19-040.00

DRAWING TITLE:
THIRD FLOOR REFLECTED CEILING PLAN

SHEET NUMBER:
A3.3

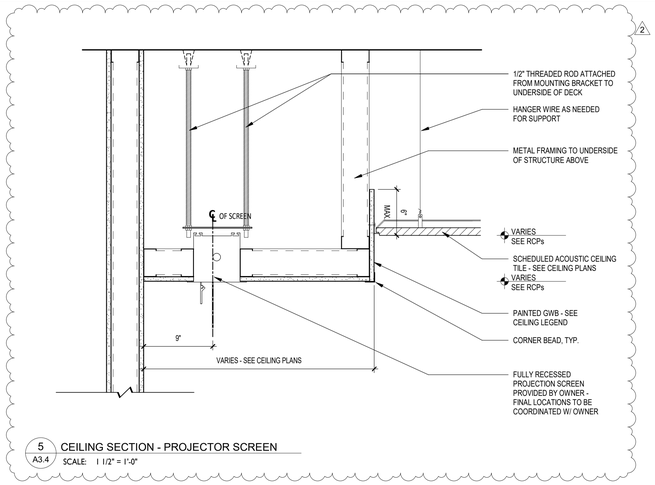

5 A3.4 CEILING SECTION - PROJECTOR SCREEN
SCALE: 1 1/2" = 1'-0"

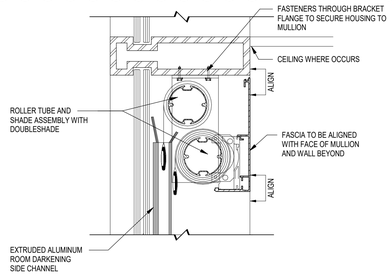

12 A3.4 CEILING DETAIL - ROLLER SHADE (RS3)
SCALE: 3" = 1'-0"

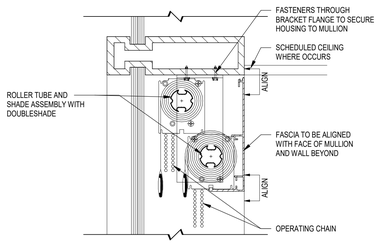

11 A3.4 CEILING DETAIL - ROLLER SHADE (RS2)
SCALE: 3" = 1'-0"

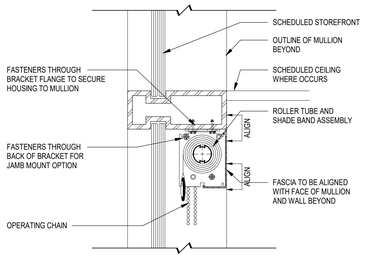

8 A3.4 CEILING DETAIL - ROLLER SHADE (RS1)
SCALE: 3" = 1'-0"

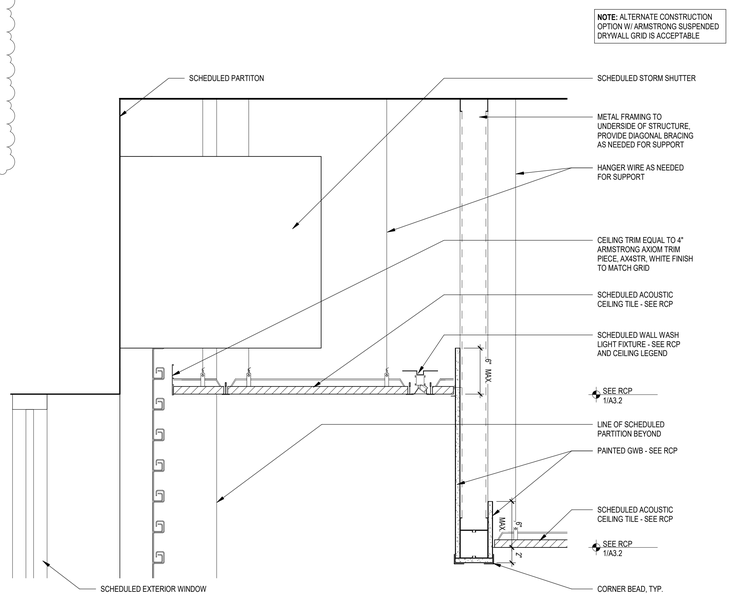

9 A3.4 CEILING SECTION - AT STORM SHUTTER
SCALE: 1 1/2" = 1'-0"

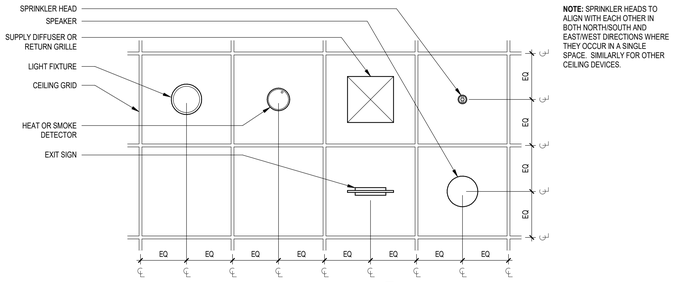

10 A3.4 TYPICAL CEILING DEVICE LAYOUT
SCALE: 3/4" = 1'-0"

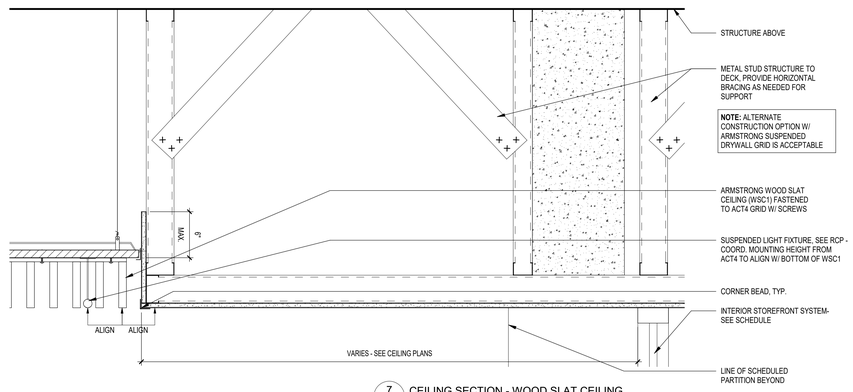

7 A3.4 CEILING SECTION - WOOD SLAT CEILING
SCALE: 1 1/2" = 1'-0"

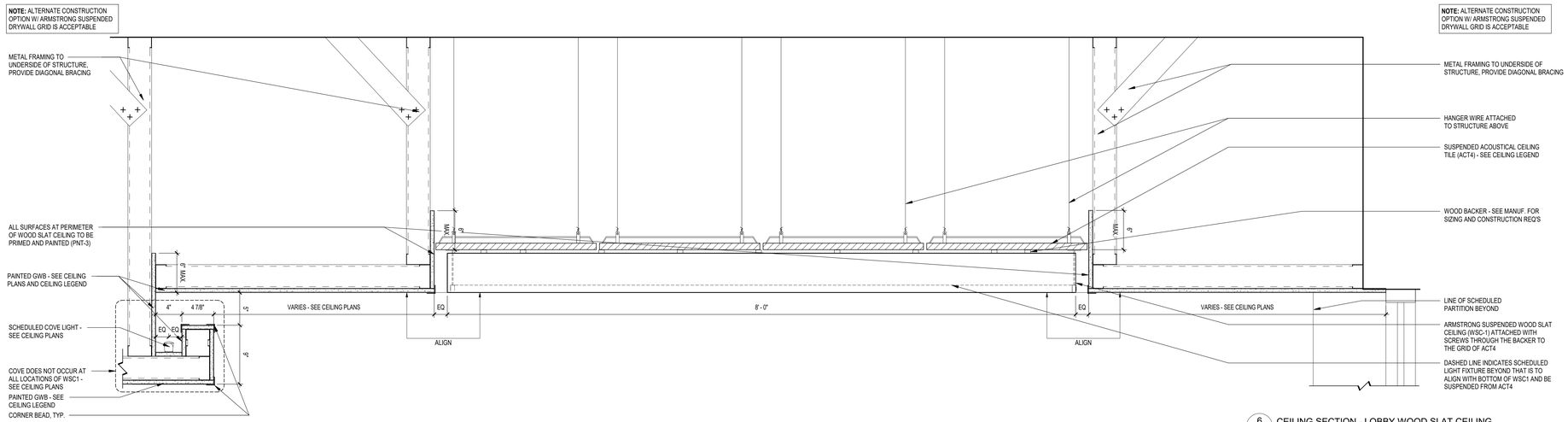

6 A3.4 CEILING SECTION - LOBBY WOOD SLAT CEILING
SCALE: 1 1/2" = 1'-0"

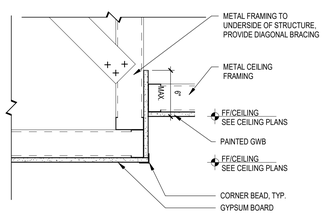

4 A3.4 CEILING SECTION - GWB SOFFIT TO GWB
SCALE: 1 1/2" = 1'-0"

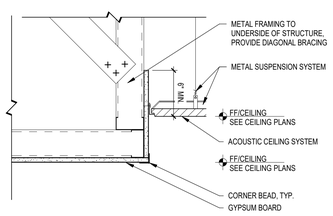

3 A3.4 CEILING SECTION - GWB SOFFIT TO ACT
SCALE: 1 1/2" = 1'-0"

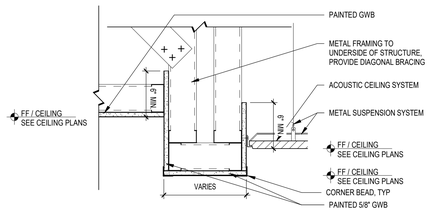

2 A3.4 CEILING SECTION - ACT TO GWB TO GWB
SCALE: 1 1/2" = 1'-0"

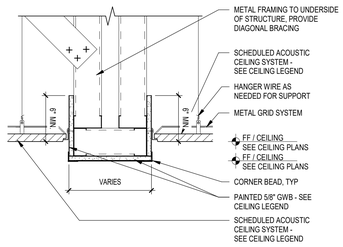

1 A3.4 CEILING SECTION - ACT TO GWB TO ACT
SCALE: 1 1/2" = 1'-0"

STATE OF ALABAMA
2522 5471
5821 6438
WILLIAMS BLACKSTOCK ARCHITECTS
6191
REGISTERED ARCHITECT

HWY 280 SHELBY COUNTY SERVICES BUILDING
CONSTRUCTION BID PACKAGE
SHELBY COUNTY DEPARTMENT OF DEVELOPMENT SERVICES
19220 US HWY 280, BIRMINGHAM, AL 35242
19-040.00

ARCHITECT OF RECORD :
WILLIAMS· BLACKSTOCK
ARCHITECTS
ARCHITECTURE INTERIORS PLANNING
SUITE 200
2204 FIRST AVENUE SOUTH
BIRMINGHAM, ALABAMA 35233

KEY PLAN :

ISSUE DATE:
03/06/2020

REVISIONS

NO.	DATE	DESCRIPTION
1	03/13/2020	ADDENDUM #1
2	03/20/2020	ADDENDUM #2

PROJECT NUMBER:
19-040.00

DRAWING TITLE:
CEILING DETAILS

SHEET NUMBER:
A3.4

MOCK-UP NOTES

INTERIOR MOCK-UP NOTES:

1. **TERRAZZO FLOORING MOCK-UP:** PROVIDE IN-PLACE MOCK-UP FOR TERRAZZO FLOORING AND CUT PATTERN FOR OWNER AND ARCHITECT REVIEW. MOCK-UP TO REMAIN IN-PLACE FOR ARCHITECT REVIEW AND APPROVAL. SCHEDULED FLOORING WILL BE INSTALLED AFTER ARCHITECT REVIEW AND APPROVAL OF MOCK-UP.
2. **TILE MOCK-UP:** PREPARE FULL SCALE MOCK-UP OF TILE WALL, BASE, AND FLOOR (SEE FINISH SCHEDULE AND LEGEND). DEPENDING ON OWNER AND ARCHITECT APPROVAL OF THE MOCK-UP, IT MAY REMAIN AS THE FINISHED CONDITIONS OF THE ROOM. LOCATION FOR TILE MOCK-UP TO BE DETERMINED AT A LATER DATE WITH THE OWNER AND ARCHITECT.
3. **PAINT MOCK-UP:** PROVIDE AN 8' X 8' PAINTED WALL MOCK-UP OF EACH COLOR AND FINISH CALLED OUT ON THE FINISH SCHEDULE. LOCATION FOR PAINT MOCK-UP TO BE DETERMINED AT A LATER DATE WITH THE OWNER AND ARCHITECT.

EXTERIOR MOCK-UP NOTES:

1. EXTERIOR MOCK-UP LOCATIONS ARE TO BE COORDINATED W/ THE GC, ARCHITECT, AND OWNER DURING PRE-CONSTRUCTION MEETING.
2. MOCK-UPS ARE TO BE CONSTRUCTED AS STAND ALONE MOCK-UPS. MOCK-UPS ARE NOT TO BE CONSTRUCTED AS IN-PLACE MOCK-UPS.
3. REFER TO ARCHITECTURAL DRAWINGS FOR TYPICAL HEAD, JAMB, AND SILL DETAILS OF WINDOWS. THE GENERAL CONTRACTOR MUST REFER TO THESE DRAWINGS FOR DIRECTION ON FLASHING, INSULATION LOCATIONS, WATERPROOFING, ATTACHMENT REQUIREMENTS, ETC. FOR ALL EXTERIOR WALL OPENINGS. SHOULD AN ENVELOPE CONDITION NOT BE DETAILED, THE GC WILL BE REQUIRED TO PROVIDE WATERPROOFING AND FLASHING AS REQUIRED TO MEET THE STANDARDS IDENTIFIED IN THE ARCHITECTURAL DRAWINGS.
4. REFER TO ARCHITECTURAL DRAWINGS FOR SLAB, COPING, METAL PANEL REVEAL, BRAKE METAL BASE, BRICK SOLDIER/ROWLOCK, AND CEILING DETAILS.
5. PROVIDE BRICK CONTROL JOINTS WHERE NOTED.
6. REFER TO STRUCTURAL DRAWINGS FOR CONCRETE FOOTING DETAILS.
7. INSTALLED MOCK-UP WINDOWS TO BE PERFORMANCE TESTED PER THE SPECIFICATIONS.
8. FINAL FINISH COLORS FOR BRICK VENEER, ALUMINUM COMPOSITE PANELS, COPINGS, ALUMINUM STOREFRONT WINDOW FRAMES, BRAKE METAL, AND SEALANTS TO BE SELECTED BY ARCHITECT PRIOR TO MOCK-UP CONSTRUCTION.

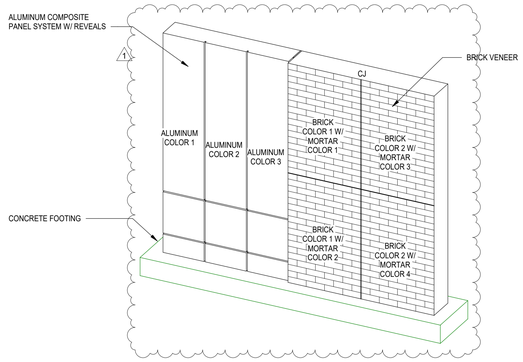

7 A4.3 EXTERIOR MOCK-UP #2 - FRONT AXON DIAGRAMMATIC
NOT TO SCALE

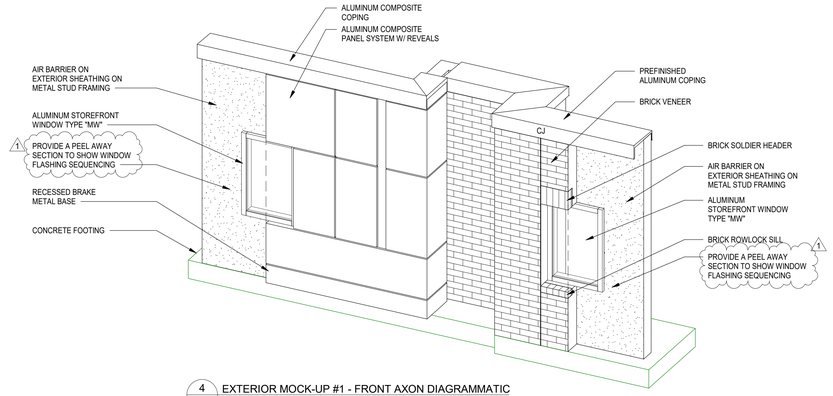

4 A4.3 EXTERIOR MOCK-UP #1 - FRONT AXON DIAGRAMMATIC
NOT TO SCALE

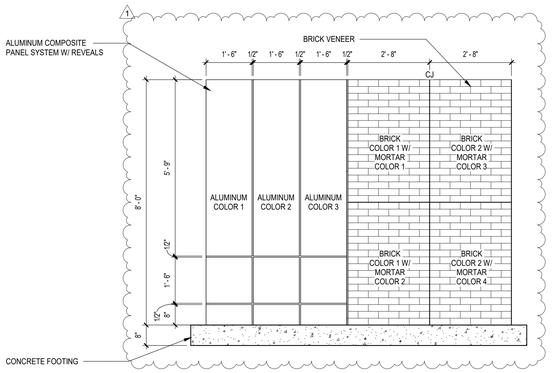

6 A4.3 EXTERIOR MOCK-UP #2 - ELEVATION FOR COLOR SELECTION
SCALE: 1/2" = 1'-0"

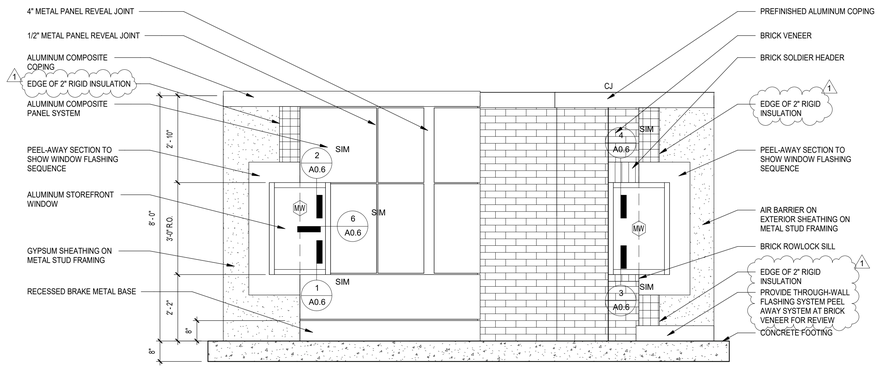

3 A4.3 EXTERIOR MOCK-UP #1 - ELEVATION
SCALE: 1/2" = 1'-0"

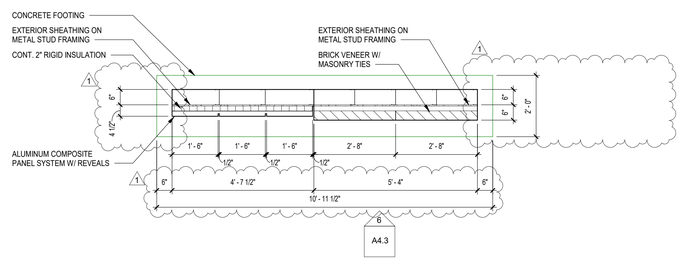

5 A4.3 EXTERIOR MOCK-UP #2 - PLAN FOR COLOR SELECTION
SCALE: 1/2" = 1'-0"

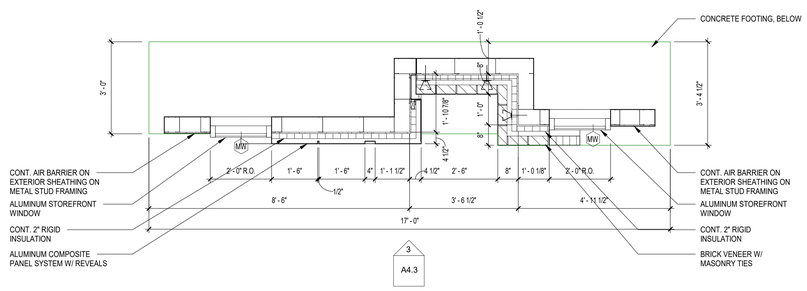

2 A4.3 EXTERIOR MOCK-UP #1 - PLAN
SCALE: 1/2" = 1'-0"

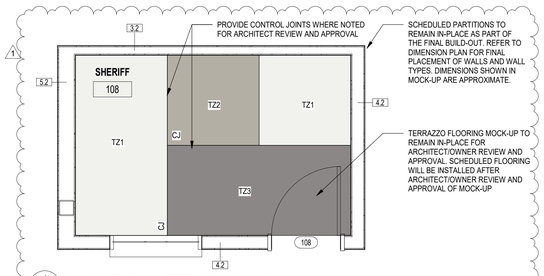

1 A4.3 ENLARGED PLAN - TERRAZZO MOCK-UP
SCALE: 3/8" = 1'-0"

STATE OF ALABAMA
2522
5471
5821
WILLIAMS - BLACKSTOCK
REGISTERED ARCHITECT

HWY 280 SHELBY COUNTY SERVICES BUILDING
CONSTRUCTION BID PACKAGE
SHELBY COUNTY DEPARTMENT OF DEVELOPMENT SERVICES
19220 US HWY 280, BIRMINGHAM, AL 35242
19-040.00

ARCHITECT OF RECORD:
WILLIAMS· BLACKSTOCK
ARCHITECTS
ARCHITECTURE INTERIORS PLANNING
SUITE 200
2204 FIRST AVENUE SOUTH
BIRMINGHAM, ALABAMA 35233

KEY PLAN:

ISSUE DATE:
03/06/2020

REVISIONS

NO.	DATE	DESCRIPTION
1	03/20/20	ADDENDUM #2

PROJECT NUMBER:
19-040.00

DRAWING TITLE:
MOCK-UPS

SHEET NUMBER:
A4.3

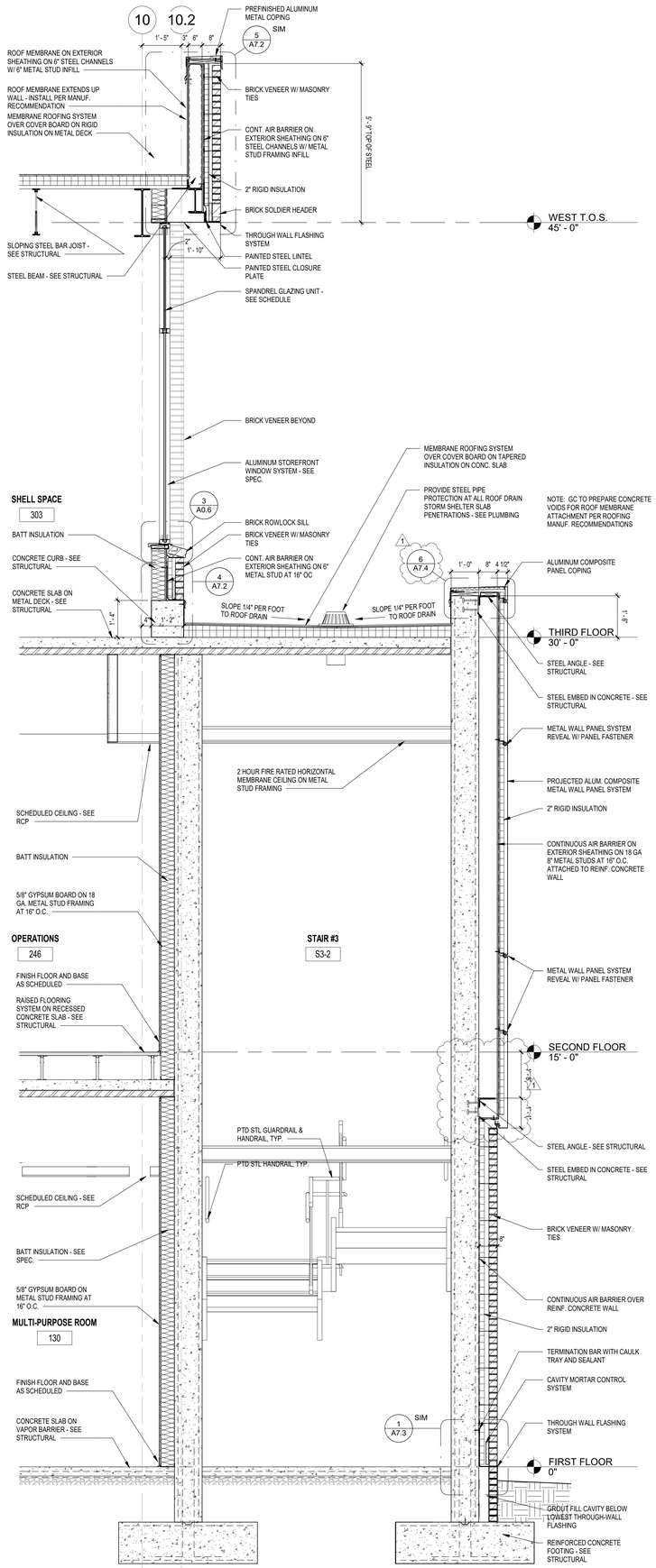

3 A6.4 WALL SECTION
SCALE: 1/2" = 1'-0"

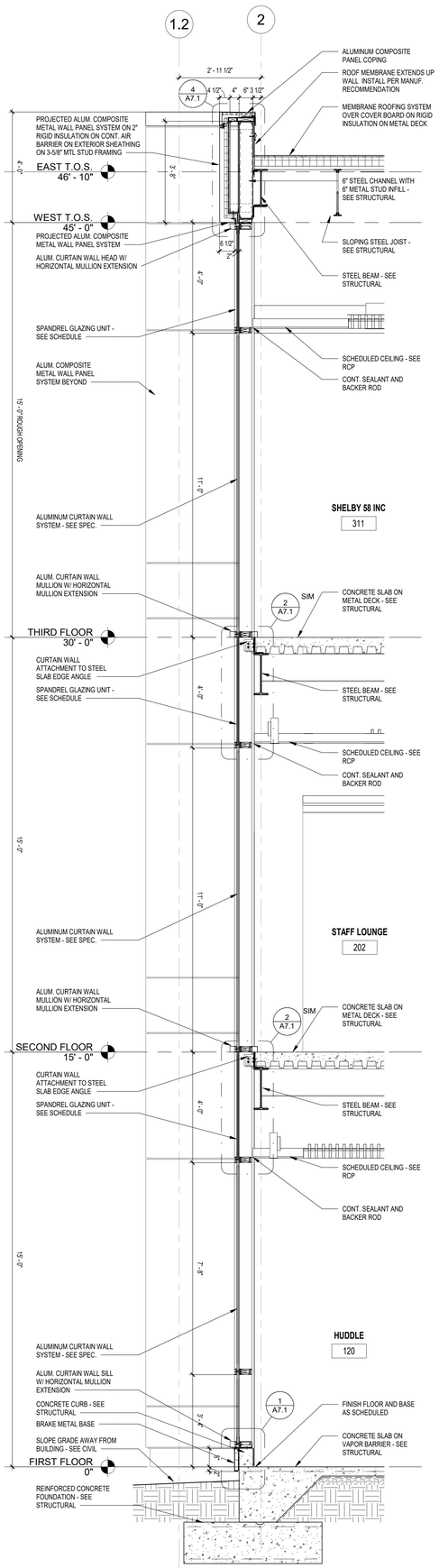

2 A6.4 WALL SECTION
SCALE: 1/2" = 1'-0"

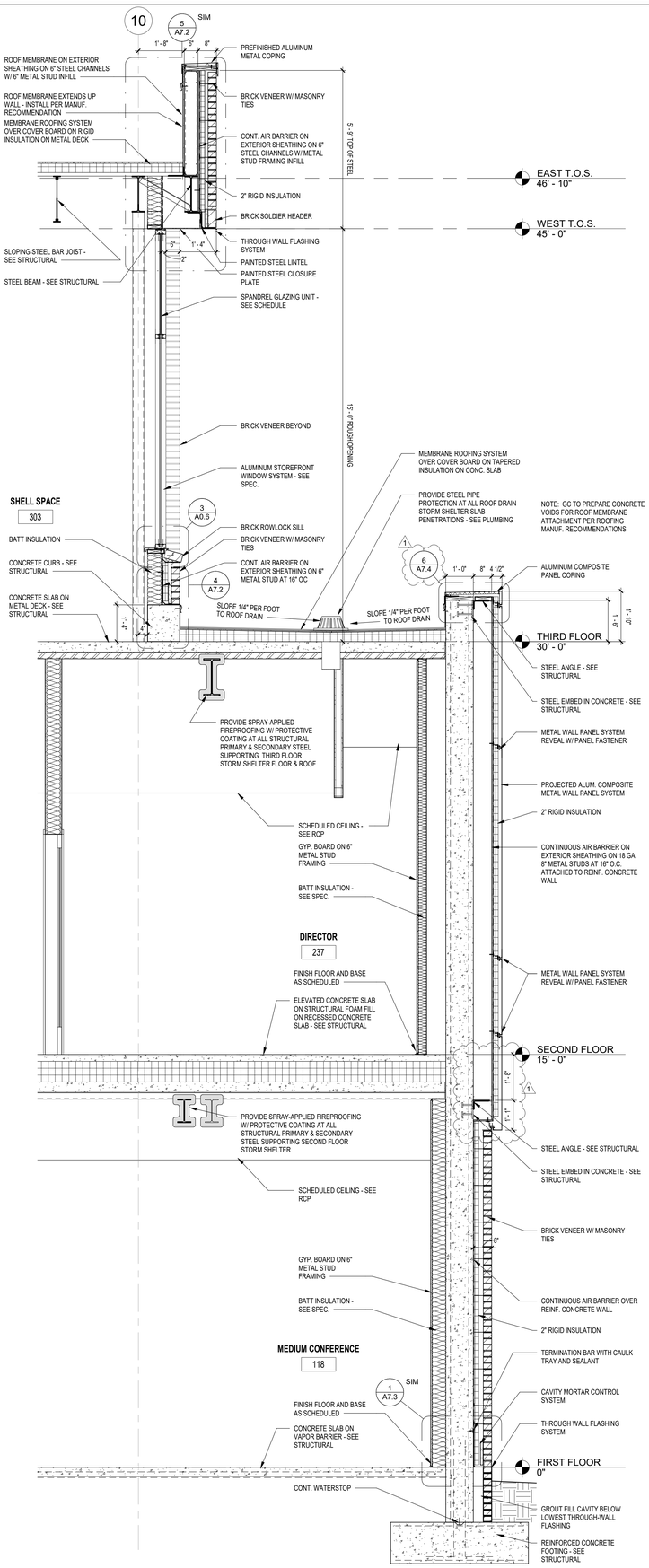

1 A6.4 WALL SECTION
SCALE: 1/2" = 1'-0"

STATE OF ALABAMA
2522 5471
5821 6438
WILLIAMS BLACKSTOCK ARCHITECTS
6191
REGISTERED ARCHITECT

HWY 280 SHELBY COUNTY SERVICES BUILDING
CONSTRUCTION BID PACKAGE
SHELBY COUNTY DEPARTMENT OF DEVELOPMENT SERVICES
19220 US HWY 280, BIRMINGHAM, AL 35242
19-040.00

ARCHITECT OF RECORD :
WILLIAMS· BLACKSTOCK
ARCHITECTS
ARCHITECTURE INTERIORS PLANNING
SUITE 200
2204 FIRST AVENUE SOUTH
BIRMINGHAM, ALABAMA 35233

KEY PLAN :

ISSUE DATE:
03/06/2020

REVISIONS

NO.	DATE	DESCRIPTION
1	03/20/2020	ADDENDUM #2

PROJECT NUMBER:
19-040.00

DRAWING TITLE:
WALL SECTIONS

SHEET NUMBER:
A6.4

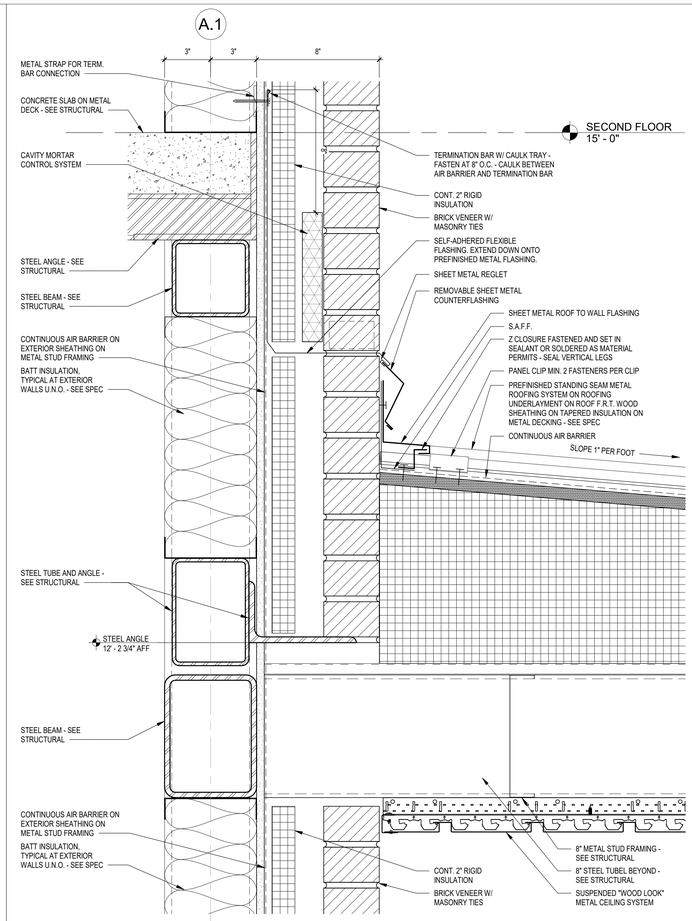

5 A7.4 SECTION DETAIL - ENTRY CANOPY AT BRICK
SCALE: 3" = 1'-0"

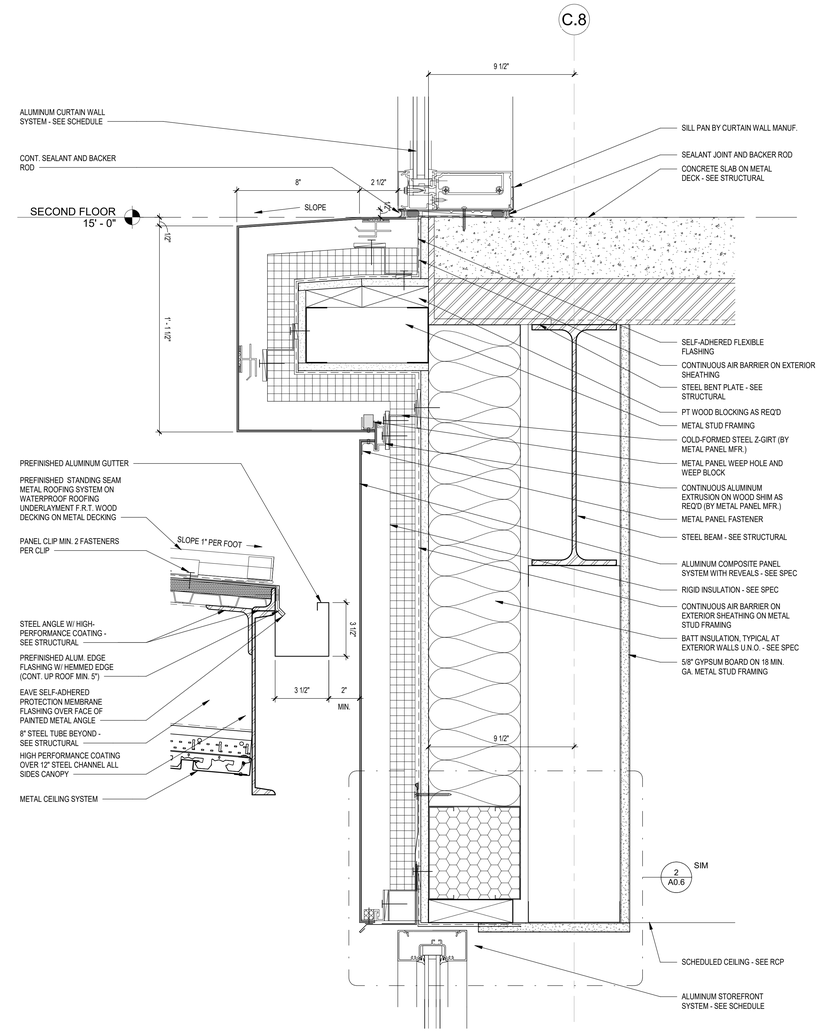

2 A7.4 SECTION DETAIL - AT METAL PANEL AND REAR CANOPY
SCALE: 3" = 1'-0"

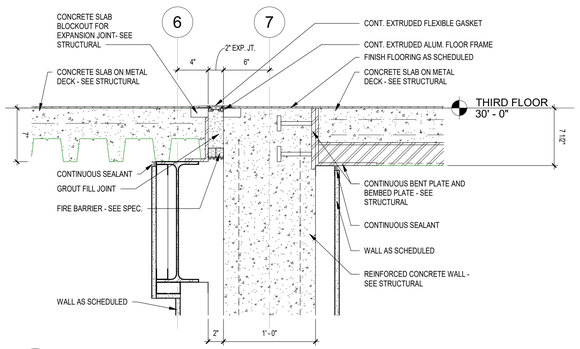

4 A7.4 SECTION DETAIL AT FLOOR EXPANSION JOINT
SCALE: 1 1/2" = 1'-0"

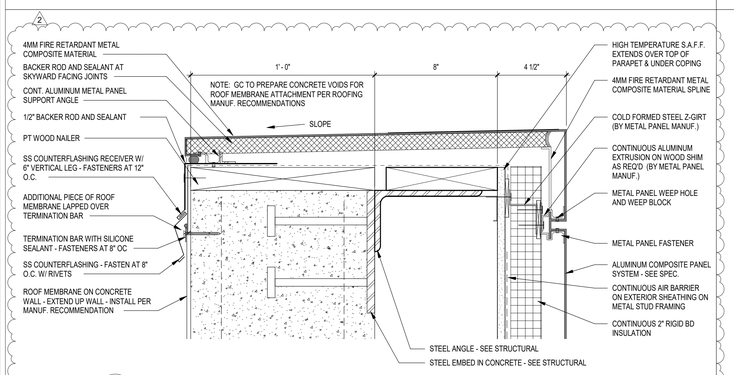

6 A7.4 ROOF DETAIL - PROJECTED METAL PANEL PARAPET
SCALE: 3" = 1'-0"

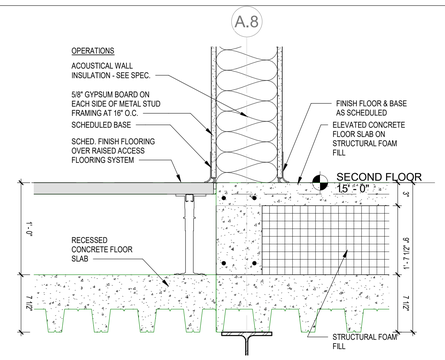

3 A7.4 SECTION DETAIL - ELEVATED STORM SHELTER SLAB
SCALE: 1 1/2" = 1'-0"

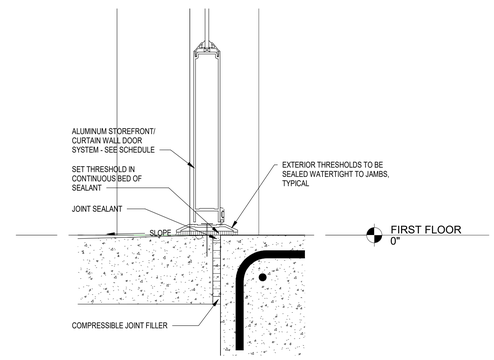

1 A7.4 SECTION DETAIL - STOREFRONT DOOR THRESHOLD
SCALE: 3" = 1'-0"

STATE OF ALABAMA
2522 5471
5821 6438
WILLIAMS BLACKSTOCK ARCHITECTS
6191
REGISTERED ARCHITECT

HWY 280 SHELBY COUNTY SERVICES BUILDING
CONSTRUCTION BID PACKAGE

SHELBY COUNTY DEPARTMENT OF DEVELOPMENT SERVICES
19220 US HWY 280, BIRMINGHAM, AL 35242
19-040.00

ARCHITECT OF RECORD :
WILLIAMS· BLACKSTOCK
ARCHITECTS
ARCHITECTURE INTERIORS PLANNING
SUITE 200
2204 FIRST AVENUE SOUTH
BIRMINGHAM, ALABAMA 35233

KEY PLAN :

ISSUE DATE:
03/06/2020

REVISIONS

NO.	DATE	DESCRIPTION
1	03/13/2020	ADDENDUM #1
2	03/20/2020	ADDENDUM #2

PROJECT NUMBER:
19-040.00

DRAWING TITLE:
SECTION DETAILS

SHEET NUMBER:
A7.4

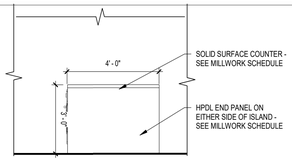

18 A9.5 INTERIOR ELEVATION - STAFF LOUNGE ISLAND SIDE
SCALE: 3/8" = 1'-0"

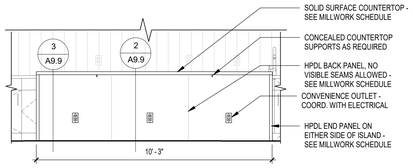

17 A9.5 INTERIOR ELEVATION - STAFF LOUNGE ISLAND BACK
SCALE: 3/8" = 1'-0"

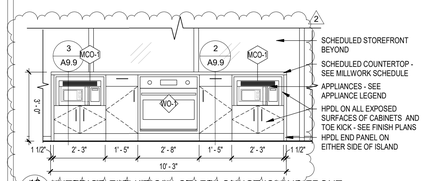

16 A9.5 INTERIOR ELEVATION - STAFF LOUNGE ISLAND FRONT
SCALE: 3/8" = 1'-0"

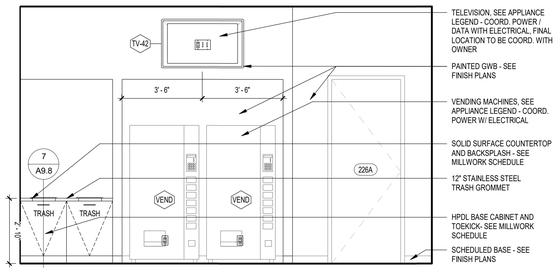

15 A9.5 INTERIOR ELEVATION - STAFF LOUNGE VENDING WALL
SCALE: 3/8" = 1'-0"

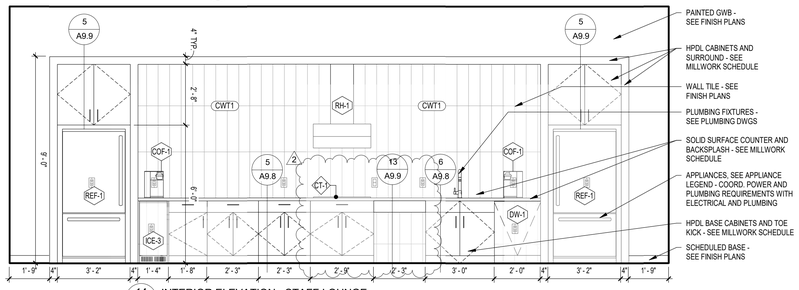

14 A9.5 INTERIOR ELEVATION - STAFF LOUNGE
SCALE: 3/8" = 1'-0"

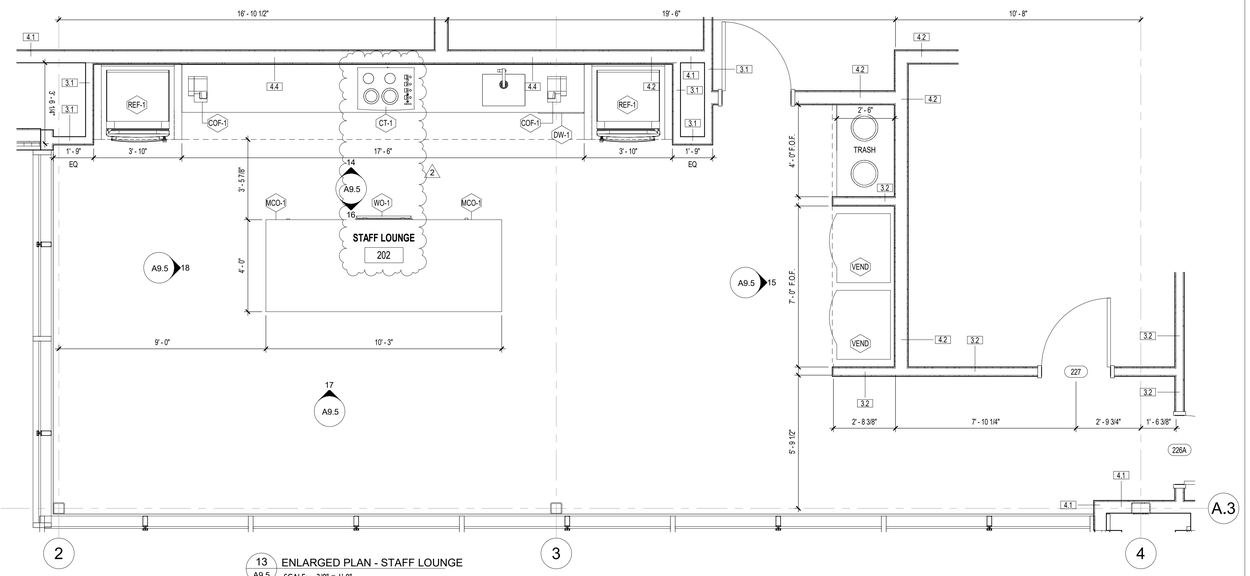

13 A9.5 ENLARGED PLAN - STAFF LOUNGE
SCALE: 3/8" = 1'-0"

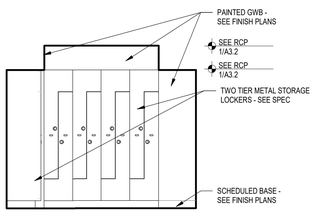

12 A9.5 INTERIOR ELEVATION - LOCKERS 240
SCALE: 3/8" = 1'-0"

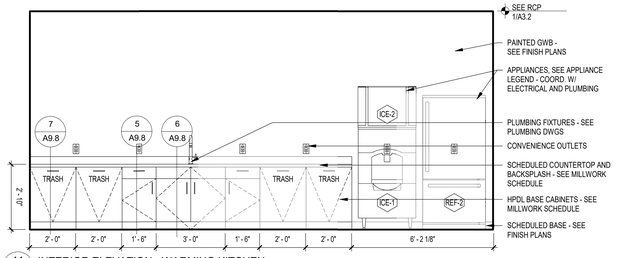

11 A9.5 INTERIOR ELEVATION - WARMING KITCHEN
SCALE: 3/8" = 1'-0"

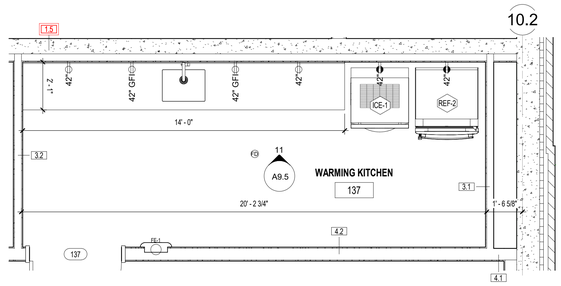

10 A9.5 ENLARGED PLAN - WARMING KITCHEN
SCALE: 3/8" = 1'-0"

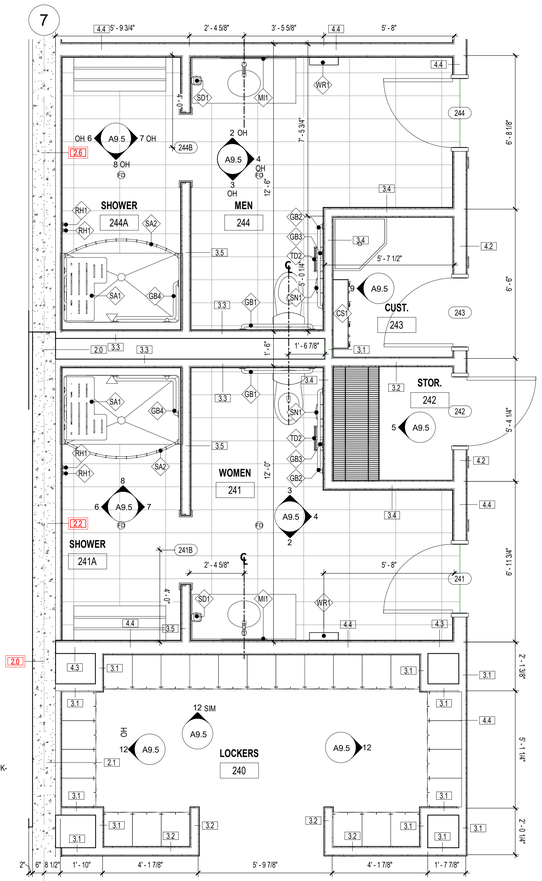

1 A9.5 ENLARGED PLAN - 911 TOILETS
SCALE: 3/8" = 1'-0"

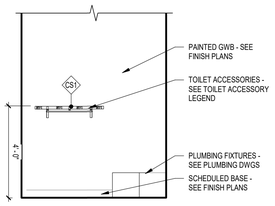

9 A9.5 INTERIOR ELEVATION - CUSTODIAL CLOSET
SCALE: 3/8" = 1'-0"

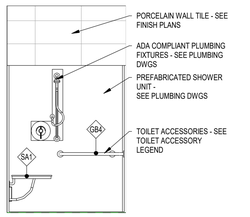

8 A9.5 INTERIOR ELEVATION - SHOWER WEST WALL
SCALE: 3/8" = 1'-0"

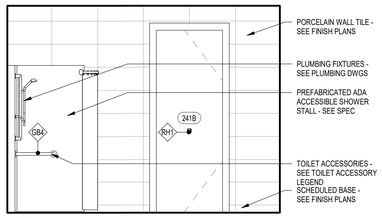

7 A9.5 INTERIOR ELEVATION - SHOWER NORTH WALL
SCALE: 3/8" = 1'-0"

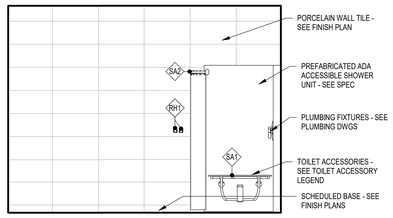

6 A9.5 INTERIOR ELEVATION - SHOWER SOUTH WALL
SCALE: 3/8" = 1'-0"

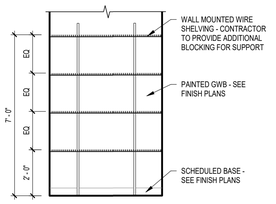

5 A9.5 INTERIOR ELEVATION - STORAGE SIDE
SCALE: 3/8" = 1'-0"

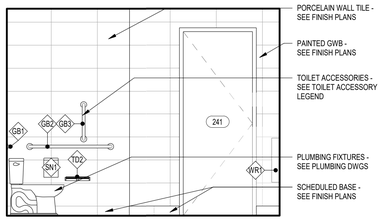

4 A9.5 INTERIOR ELEVATION - WOMEN'S NORTH
SCALE: 3/8" = 1'-0"

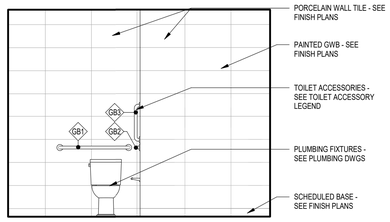

3 A9.5 INTERIOR ELEVATION - WOMEN'S WEST TOILET WALL
SCALE: 3/8" = 1'-0"

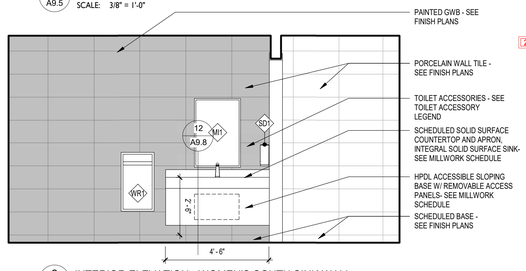

2 A9.5 INTERIOR ELEVATION - WOMEN'S SOUTH SINK WALL
SCALE: 3/8" = 1'-0"

STATE OF ALABAMA
2522 5471
5821 6438
WILLIAMS BLACKSTOCK ARCHITECTS
6191
REGISTERED ARCHITECT

HWY 280 SHELBY COUNTY SERVICES BUILDING
CONSTRUCTION BID PACKAGE
SHELBY COUNTY DEPARTMENT OF DEVELOPMENT SERVICES
19220 US HWY 280, BIRMINGHAM, AL 35242
19-040.00

ARCHITECT OF RECORD :
WILLIAMS· BLACKSTOCK
ARCHITECTS
ARCHITECTURE INTERIORS PLANNING
SUITE 200
2204 FIRST AVENUE SOUTH
BIRMINGHAM, ALABAMA 35233

KEY PLAN :

ISSUE DATE:
03/06/2020

REVISIONS

NO.	DATE	DESCRIPTION
1	03/13/2020	ADDENDUM #1
2	03/20/2020	ADDENDUM #2

PROJECT NUMBER:
19-040.00

DRAWING TITLE:
ENLARGED PLANS & INTERIOR ELEVATIONS

SHEET NUMBER:
A9.5

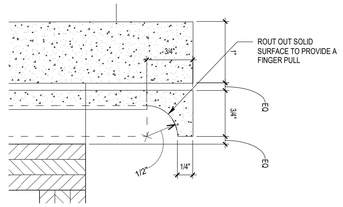

12 A9.9 MILLWORK SECTION - LICENSING SUPPORT FINGER PULL
SCALE: 1 2" = 1'-0"

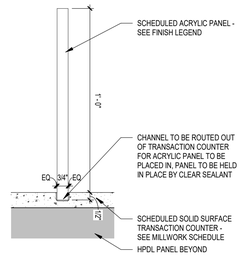

11 A9.9 MILLWORK SECTION - ACRYLIC PANELS
SCALE: 3" = 1'-0"

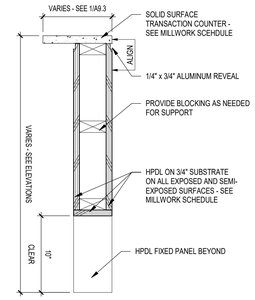

10 A9.9 MILLWORK SECTION - MILLWORK DOOR W/ SS CAP
SCALE: 1 1/2" = 1'-0"

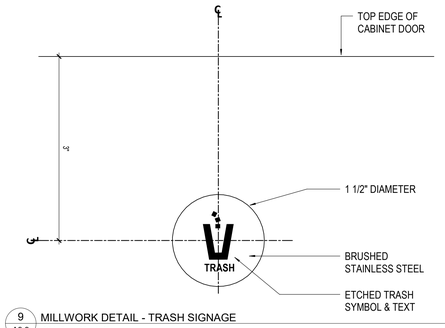

9 A9.9 MILLWORK DETAIL - TRASH SIGNAGE
SCALE: 1 2" = 1'-0"

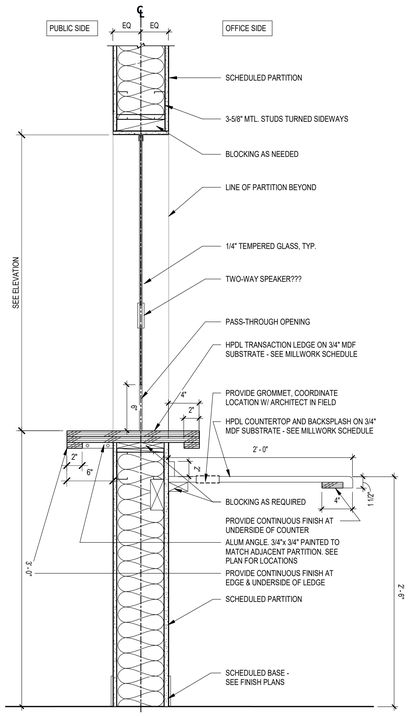

7 A9.9 MILLWORK SECTION - TRANSACTION COUNTER W/ FIXED WINDOW
SCALE: 1 1/2" = 1'-0"

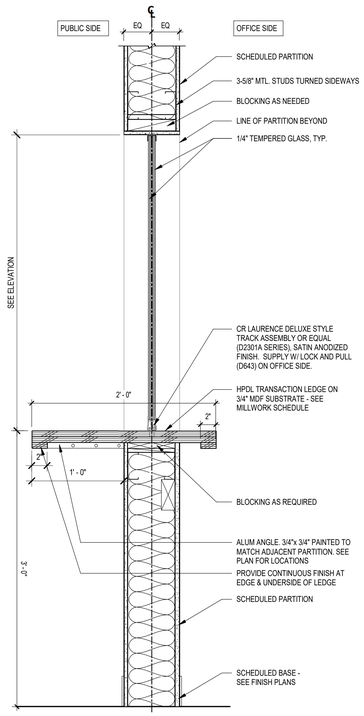

6 A9.9 MILLWORK SECTION - TRANSACTION COUNTER W/ SLIDING WINDOW
SCALE: 1 1/2" = 1'-0"

2

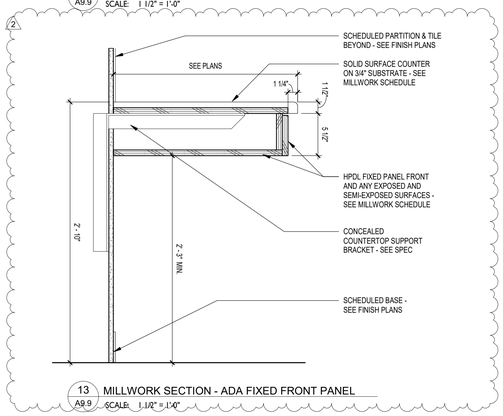

13 A9.9 MILLWORK SECTION - ADA FIXED FRONT PANEL
SCALE: 1 1/2" = 1'-0"

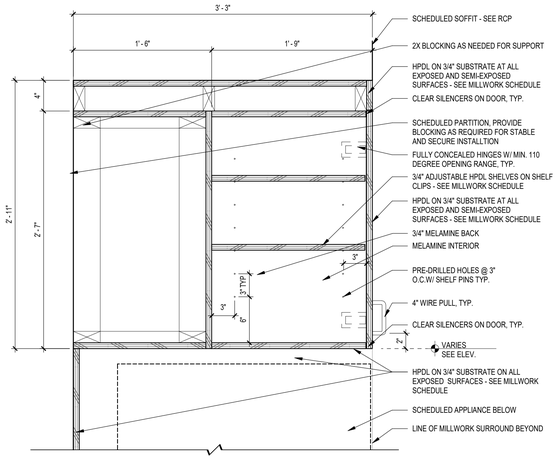

5 A9.9 MILLWORK SECTION - OVER REFRIGERATOR CAB. AT STAFF LOUNGE
SCALE: 1 1/2" = 1'-0"

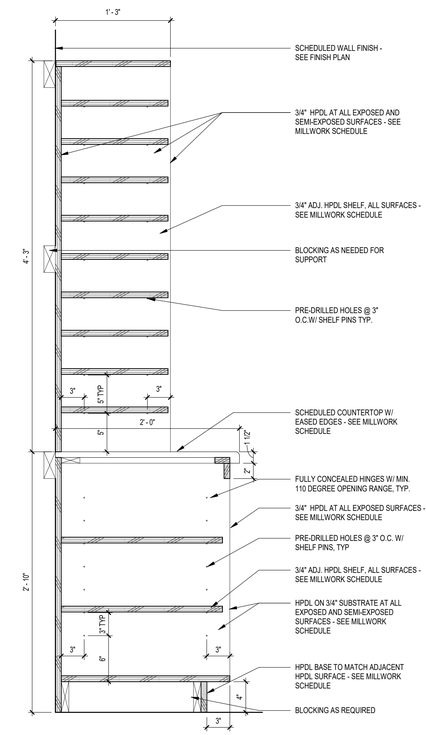

4 A9.9 MILLWORK SECTION - MAIL ROOM
SCALE: 1 1/2" = 1'-0"

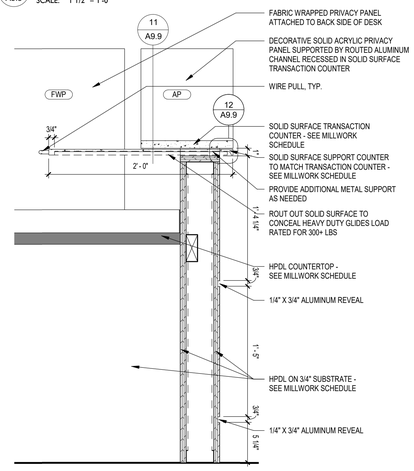

8 A9.9 MILLWORK SECTION - LICENSING SUPPORT
SCALE: 1 1/2" = 1'-0"

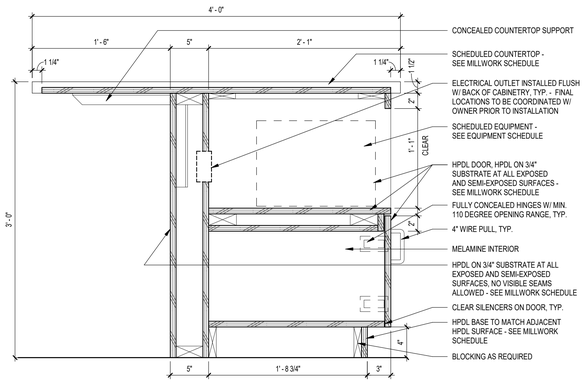

3 A9.9 MILLWORK SECTION - ISLAND MICROWAVE CABINET
SCALE: 1 1/2" = 1'-0"

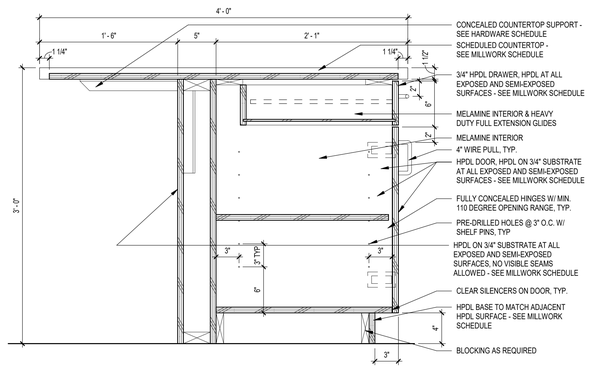

2 A9.9 MILLWORK SECTION - ISLAND BASE CABINET
SCALE: 1 1/2" = 1'-0"

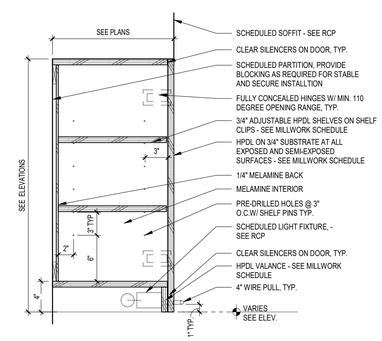

1 A9.9 MILLWORK SECTION - TYP. OVERHEAD CABINET W/ UC LIGHT
SCALE: 1 1/2" = 1'-0"

STATE OF ALABAMA
2522 5471
5821 6438
WILLIAMS BLACKSTOCK ARCHITECTS
6191
REGISTERED ARCHITECT

HWY 280 SHELBY COUNTY SERVICES BUILDING
CONSTRUCTION BID PACKAGE
SHELBY COUNTY DEPARTMENT OF DEVELOPMENT SERVICES
19220 US HWY 280, BIRMINGHAM, AL 35242
19-040.00

ARCHITECT OF RECORD :
WILLIAMS- BLACKSTOCK
A R C H I T E C T S
ARCHITECTURE INTERIORS PLANNING
SUITE 200
2204 FIRST AVENUE SOUTH
BIRMINGHAM, ALABAMA 35233

KEY PLAN :

ISSUE DATE:
03/06/2020

REVISIONS

NO.	DATE	DESCRIPTION
1	03/13/2020	ADDENDUM #1
2	03/20/2020	ADDENDUM #2

PROJECT NUMBER:
19-040.00

DRAWING TITLE:
MILLWORK SECTIONS

SHEET NUMBER:
A9.9

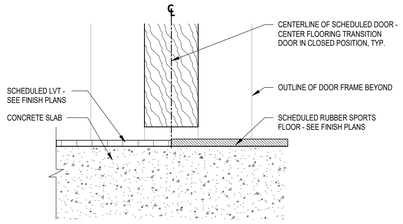

T8 A9.10 TRANSITION DETAIL - LVT TO RSF
SCALE: 6" = 1'-0"

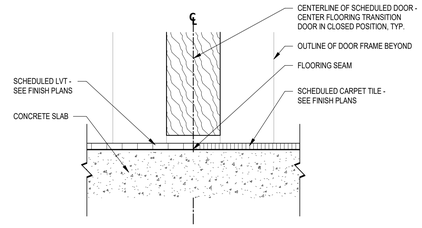

T4 A9.10 TRANSITION DETAIL - LVT TO CPT
SCALE: 6" = 1'-0"

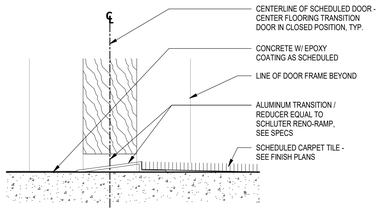

T7 A9.10 TRANSITION DETAIL - CPT TO EPX
SCALE: 6" = 1'-0"

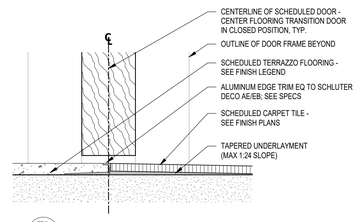

T3 A9.10 TRANSITION DETAIL - TZF TO CPT
SCALE: 6" = 1'-0"

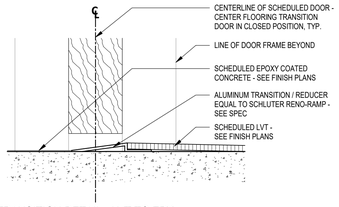

T6 A9.10 TRANSITION DETAIL - LVT TO EPX
SCALE: 6" = 1'-0"

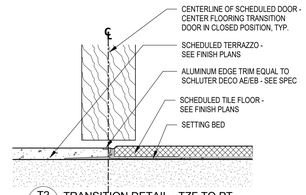

T2 A9.10 TRANSITION DETAIL - TZF TO PT
SCALE: 6" = 1'-0"

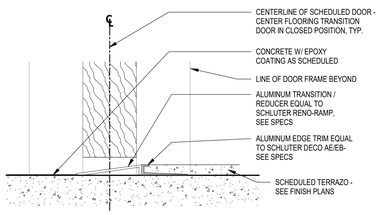

T9 A9.10 TRANSITION DETAIL - TZF TO EPX
SCALE: 6" = 1'-0"

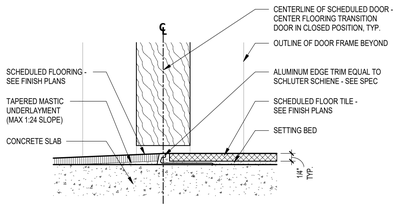

T5 A9.10 TRANSITION DETAIL - CPT / LVT TO PT
SCALE: 6" = 1'-0"

2

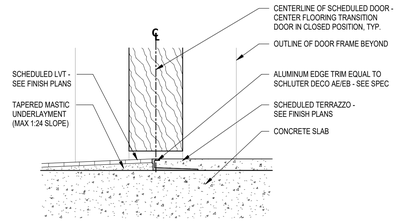

T1 A9.10 TRANSITION DETAIL - TZF TO LVT
SCALE: 6" = 1'-0"

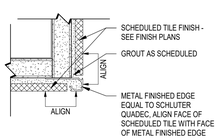

3 A9.10 DETAIL - WALL TILE CORNER METAL EDGE TRIM
SCALE: 6" = 1'-0"

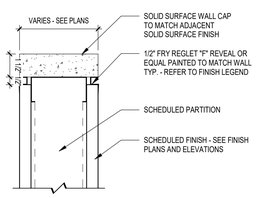

2 A9.10 DETAIL - SOLID SURFACE WALL CAP
SCALE: 3" = 1'-0"

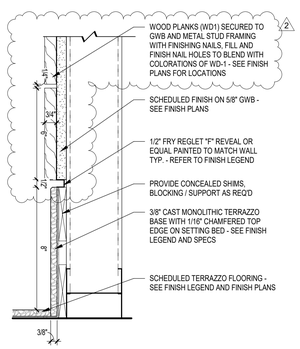

1 A9.10 BASE DETAIL - TERRAZZO BASE (TZB)
SCALE: 3" = 1'-0"

APPLIANCE LEGEND

(A) — APPLIANCE TAG

TYPE	DESCRIPTION	MANUF.	MODEL	SIZE (LxWxH)	FINISH	PROVIDER / INSTALLER	COMMENTS
COF-1	COFFEE MAKER	TBD	TBD	TBD	TBD	OWNER / CONTRACTOR	COORD. W/ PLUMBING & ELECTRICAL
COF-2	COFFEE MAKER	TBD	TBD	TBD	TBD	OWNER / CONTRACTOR	COORD. W/ PLUMBING & ELECTRICAL
CT-1	COOKTOP	GE	JP3030SJSS	29.875"x21"x4"	STAINLESS STEEL	OWNER / CONTRACTOR	2
ICE-1	ICE DISPENSER	ICE-O-MATIC	IOD200	30"x30.75"x35.75"	STAINLESS STEEL	OWNER / CONTRACTOR	
ICE-2	NUGGET ICE MAKER	ICE-O-MATIC	GEM0650	24"x21"x27"	STAINLESS STEEL	OWNER / CONTRACTOR	
ICE-3	UNDER COUNTER ICE MAKER	SUMMIT	GEM0650	24"x21"x27"	STAINLESS STEEL	OWNER / CONTRACTOR	
MCO-1	MICROWAVE	GE	TBD	TBD	STAINLESS STEEL	OWNER / CONTRACTOR	
PRJ-1	SURFACE MOUNTED PROJECTOR	TBD	TBD	TBD	----	OWNER / CONTRACTOR	CONTRACTOR TO PROVIDE ADDTL STRUCTURE ABOVE CEILING PER MANUF. REQS. - COORD. W/ OWNER FOR ELECTRICAL & DATA REQS AND FINAL LOCATION
PRJ-2	MOTORIZED PROJECTOR	TBD	TBD	TBD		OWNER / CONTRACTOR	
PRS	MOTORIZED PROJECTION SCREEN	TBD	TBD	TBD	----	CONTRACTOR	2
RH-2	RANGE HOOD	ACCUREX	XRSS	29.75"x34.5"x66.5"	STAINLESS STEEL	OWNER / CONTRACTOR	
REF-1	BOTTOM FREEZER REFRIGERATOR	GE	GDE25ESKSS	32.75"x37.5"x70"	STAINLESS STEEL	OWNER / CONTRACTOR	
REF-2	TOP FREEZER REFRIGERATOR	GE	GTE19JSNRSS	29.75"x34.5"x66.5"	STAINLESS STEEL	OWNER / CONTRACTOR	
TV-45	45" TELEVISION	TBD	TBD	TBD	----	OWNER / CONTRACTOR	CONTRACTOR TO PROVIDE ADDITIONAL STRUCTURE IN WALL - COORD. W/ OWNER FOR ELECTRICAL AND DATA REQS AND FINAL LOCATION AND MONITOR SIZES
TV-60	60" TELEVISION	TBD	TBD	TBD	----	OWNER / CONTRACTOR	
TV-85	85" TELEVISION	TBD	TBD	TBD	----	OWNER / CONTRACTOR	
UCR-1	ADA UNDER COUNTER REFRIGERATOR	SUMMIT	AL54CSSHH	23.63"x22.63"x32"	STAINLESS STEEL	OWNER / CONTRACTOR	
VEND	VENDING MACHINE	TBD	TBD	TBD	TBD	OWNER / CONTRACTOR	
WO-1	WALL OVEN	GE	JTS30SSNSS	29.75"x28.625"x23.5"	STAINLESS STEEL	OWNER / CONTRACTOR	2

MILLWORK SCHEDULE - LEVEL 1

RM NAME /NUMBER	BASE CABINET	COUNTERTOP	BACKSPLASH	TRANSACTION	UPPER CABINET	COMMENTS
MAIL 102	HPDL2	HPDL1	HPDL1	----	HPDL2	
MENS 104	HPDL3	SS3	SS3	----	----	
WOMENS 105	HPDL3	SS3	SS3	----	----	
MOTHERS RM 105A	HPDL2	SS3	SS3	----	----	
SHERRIFF 108	HPDL3	HPDL2	HPDL2	SS2	----	
ALEA 110	HPDL2	HPDL1	HPDL1	SS2	----	
TELLER 125	HPDL2	HPDL1	HPDL1	SS2	----	
COFFEE 128	HPDL2	SS1	SS1	----	----	
LICENSING 129	HPDL2	HPDL1	HPDL1	SS2	----	
COPY 129A	HPDL2	HPDL1	HPDL1	----	HPDL2	
WARMING KITCHEN 137	HPDL2	SS1	SS1	----	----	

MILLWORK SCHEDULE - LEVEL 2

RM NAME /NUMBER	BASE CABINET	COUNTERTOP	BACKSPLASH	TRANSACTION	UPPER CABINET	COMMENTS
STAFF LOUNGE 202	HPDL2	SS1	SS1	----	HPDL2	
MENS 204	HPDL3	SS3	SS3	----	----	
WOMENS 205	HPDL3	SS3	SS3	----	----	
REPORTING 218	----	HPDL1	HPDL1	----	----	
COPY 224	HPDL2	HPDL1	HPDL1	----	HPDL2	
OFFICE MANAGER 225	----	----	----	SS2	----	
CORRIDOR 236	HPDL2	SS1	SS1	----	HPDL2	
WOMENS 241	HPDL3	SS3	SS3	----	----	
MENS 244	HPDL3	SS3	SS3	----	----	

MILLWORK SCHEDULE - LEVEL 3

RM NAME /NUMBER	BASE CABINET	COUNTERTOP	BACKSPLASH	TRANSACTION	UPPER CABINET	COMMENTS
MENS 304	HPDL3	SS3	SS3	----	----	
WOMENS 305	HPDL3	SS3	SS3	----	----	
WORKROOM 326	HPDL2	HPDL1	HPDL1		HPDL2	

TOILET ACCESSORY LEGEND

(XX) — TOILET ACCESSORY TAG

TYPE	DESCRIPTION	MANUF.	MODEL	PROVIDER / INSTALLER	COMMENTS
CS1	CUSTODIAL SHELF, MOP AND BROOM HOLDER	BOBRICK	B-224	CPCI	
CT1	CHANGING TABLE	KOALA KARE	KB200-05	CPCI	
GB1	HORIZONTAL GRAB BAR - 36"	BOBRICK	B-6806 x 36	CPCI	B-6806 x 36 - BEHIND ADA TOILETS
GB2	HORIZONTAL GRAB BAR - 42"	BOBRICK	B-6806 x 42	CPCI	B-6806 x 42 - SIDE OF ADA
GB3	VERTICAL GRAB BAR - 18"	BOBRICK	B-6806 x 18	CPCI	
GB4	L-SHAPED SHOWER STALL GRAB BAR	BOBRICK	B-6861	CPCI	
MI1	24" x 36" CHANNEL FRAMED MIRROR	BOBRICK	B-165 2436	CPCI	
PT1	PAPER TOWEL DISPENSER	--	--	**OPCI**	
RH1	ROBE HOOK	BOBRICK	B-7671	CPCI	
SA1	SHOWER ACCESSORY - REVERSIBLE SOLID PHENOLIC FOLDING SHOWER SEAT	BOBRICK	B-5181	CPCI	
SA2	SHOWER ACCESSORY - CURVED ROD	BOBRICK	B-4207 X 60	**OPCI**	FIELD VERIFY EXACT LENGTH REQUIRED FOR SHOWER ROD PRIOR TO ORDERING. INCLUDE SHOWER CURTAIN (204-3) & HOOKS (204-1)
SD1	WALL-MOUNTED MANUAL SOAP DISPENSER	BETCO	91822-00	**OPCI**	
SN1	SANITARY NAPKIN DISPOSAL - SURFACE MOUNTED	BOBRICK	B-270	CPCI	
TD1	TOILET TISSUE DISPENSER - LARGE CAPACITY	VONDREHLE	3253	**OPCI**	
TD2	TOILET TISSUE DISPENSER	--	--	**OPCI**	
WR1	RECESSED WASTE RECEPTACLE	BOBRICK	B-3644	CPCI	

OPCI - OWNER PROVIDED CONTRACTOR INSTALLED
CPCI - CONTRACTOR PROVIDED CONTRACTOR INSTALLED

STATE OF ALABAMA
2522 5471
5821 6438
WILLIAMS BLACKSTOCK ARCHITECTS
6191
REGISTERED ARCHITECT

HWY 280 SHELBY COUNTY SERVICES BUILDING
CONSTRUCTION BID PACKAGE
SHELBY COUNTY DEPARTMENT OF DEVELOPMENT SERVICES
19220 US HWY 280, BIRMINGHAM, AL 35242
19-040.00

ARCHITECT OF RECORD :
WILLIAMS· BLACKSTOCK
ARCHITECTS
ARCHITECTURE INTERIORS PLANNING
SUITE 200
2204 FIRST AVENUE SOUTH
BIRMINGHAM, ALABAMA 35233

KEY PLAN :

ISSUE DATE:
03/06/2020

REVISIONS

NO.	DATE	DESCRIPTION
1	03/13/2020	ADDENDUM #1
2	03/20/2020	ADDENDUM #2

PROJECT NUMBER:
19-040.00

DRAWING TITLE:
INTERIOR SCHEDULES, LEGENDS, AND DETAILS

SHEET NUMBER:
A9.10

FINISH LEGEND

FLOOR FINISHES		
CODE	PRODUCT	DESCRIPTION
CC	COATED CONCRETE	MANUFACTURER: DIAMAPRO SYSTEMS, PRODUCT: UV-HS CONCRETE COATING, COLOR: N/A, FINISH: N/A, COMMENTS: SEE SPEC
CPT1	CARPET - MODULAR	MANUFACTURER: MOHAWK, COLLECTION: ICONIC EARTH, PRODUCT: METALMORPHIC; COLOR: 751 PERFECT PATHS METALLIC; DIMENSIONS: 12"x36"; INSTALL: BRICK ASHLAR
CPT2	CARPET - MODULAR	MANUFACTURER: MOHAWK, COLLECTION: ON THE SCENE, PRODUCT: HUSTLE & BUSTLE; COLOR: 837 POSH; DIMENSIONS: 24"x24"; INSTALL: VERTICAL ASHLAR
EPX	EPOXY COATING	MANUFACTURER: TBD, SEE SPEC
LVT1	LUXURY VINYL TILE	MANUFACTURER: MOHAWK, COLLECTION: HOT & HEAVY, PRODUCT: GROWN UP; COLOR: 322 FINN; THICKNESS: 5MM; DIMENSIONS: 9"x59"; INSTALL: VERTICAL ASHLAR
LVT2	LUXURY VINYL TILE	MANUFACTURER: MOHAWK, COLLECTION: HOT & HEAVY, PRODUCT: LINEATE; COLOR: 741 PARALLEL; DIMENSIONS: 9"x59"; INSTALL: SEE FINISH PLANS
LVT3	LUXURY VINYL TILE	MANUFACTURER: MOHAWK, COLLECTION: HOT & HEAVY, PRODUCT: LINEATE; COLOR: 857 MARKER; DIMENSIONS: 9"x59"; INSTALL: SEE FINISH PLANS
LVT4	LUXURY VINYL TILE	MANUFACTURER: MOHAWK, COLLECTION: HOT & HEAVY, PRODUCT: LINEATE; COLOR: 868 GROOVE; DIMENSIONS: 9"x59"; INSTALL: SEE FINISH PLANS
PT1	PORCELAIN TILE FLOOR	MANUFACTURER: DALTILE, PATTERN: CHORD, COLOR: CH24 BARITONE BEIGE, SIZE: 12X24, INSTALL PATTERN: BRICK JOINT - SEE FINISH PLAN
PT2	PORCELAIN TILE FLOOR	MANUFACTURER: DALTILE, PATTERN: CHORD, COLOR: CH21 ALLEGRO BEIGE, SIZE: 12X24, INSTALL PATTERN: BRICK JOINT - SEE FINISH PLAN
RSF1	RUBBER SPORTS TILE FLOOR	MANUFACTURER: MONDO; COLLECTION: RAMIFLEX; COLOR: 715, THICKNESS: 6MM, SIZE: 36X36
RST1	RUBBER STAIR TREADS, RISERS, AND LANDING TILE	MANUFACTURER: TARKETT; PRODUCT: RNRDTR TB1 SQ; COLOR: TB1 PEPPERCORN, COMMENT: PROVIDE MATCHING LANDING TILE IN SAME COLOR
TZ1	TERRAZZO	MANUFACTURER: TERROXY, FORMULA #: TM#20-813, EPOXY COLOR: FELTED WOOL 22133, FILLER: ATF-20, AGGREGATE MIX: 30% BLUE COAL, 20% LIGHT BLUE BARDIGLIO, 25% GA WHITE, 15% ASH GRAY GLASS, 10% PLATE GLASS, DIVIDER STRIP MATERIAL: STAINLESS STEEL CONTACT: BRAD HEDGES, PHONE: 770-325-0725 EXT 700, EMAIL: BRAD@SCSIGA.COM
TZ2	TERRAZZO	MANUFACTURER: TERROXY, FORMULA #: TM#20-814, EPOXY COLOR: MINDFUL GRAY 7005, FILLER: ATF-20, AGGREGATE MIX: 20% VALDERS, 20% CRYSTAL GLASS, 10% REBEL GRAY, 20% BEIGE BLEND, 10% GLACIER, 20% GEORGIA WHITE, DIVIDER STRIP MATERIAL: STAINLESS STEEL CONTACT: BRAD HEDGES, PHONE: 770-325-0725 EXT 700, EMAIL: BRAD@SCSIGA.COM
TZ3	TERRAZZO	MANUFACTURER: TERROXY,FORMULA #: TM#20-815, EPOXY COLOR: INTELLECTUAL GRAY 5806, FILLER: ATF-20, AGGREGATE MIX: 20% VALDERS, 20% CRYSTAL GLASS, 10% REBEL GREY, 20% BEIGE BLEND, 10% GLACIER, 20% GEORGIA WHITE, DIVIDER STRIP MATERIAL: STAINLESS STEEL CONTACT: BRAD HEDGES, PHONE: 770-325-0725 EXT 700, EMAIL: BRAD@SCSIGA.COM
WOM	CARPET TILE WALK-OFF MAT	MANUFACTURER: TANDUS; STYLE: ABRASIVE ACTION II 02578; COLOR: WINTER GRAY 19103; SIZE:24"X24" ; INSTALL PATTERN: MONOLITHIC

BASE FINISHES		
RB	RUBBER BASE	MANUFACTURER: JOHNSONITE, COLOR: TB1 PEPPERCORN, HEIGHT: 4" COVED, COMMENT: NO PRE-MOLDED CORNERS, MINIMIZE AMOUNT OF CUT PIECES
PTB1	PORCELAIN TILE BASE	MANUFACTURER: DALTILE, COLOR: CH24 BARITONE BEIGE, HEIGHT: 4" COVED
PTB2	PORCELAIN TILE BASE	MANUFACTURER: DALTILE, COLOR: CH21 ALLEGRO BEIGE, HEIGHT: 4" COVED, COMMENT: LOCATED WHERE PWT1 AND PWT3 OCCUR, ALL WALL, FLOOR AND BASE GROUT JOINTS ARE TO ALIGN
TZB1	TERRAZZO BASE	COLOR TO MATCH TZ2

TZ1 TZ2 TZ3 LVT2 LVT3 LVT4

WALL FINISHES		
CWT1	CERAMIC WALL TILE	MANUFACTURER: CERAMIC TECHNICS; COLLECTION: STUDIO ELEMENTS HANDMOLDED; COLOR: CLOUD; SIZE: 3X12; FINISH: GLOSSY; INSTALLATION: VERTICAL STACKED JOINT
PNT1	PAINT (GENERAL WALLS)	SHERWIN WILLIAMS: SW6070 HERON PLUME, FINISH: EGGSHELL ON VERTICAL PARTITIONS
PNT2	PAINT (ACCENT WALLS)	MANUFACTURER: SHERWIN WILLIAMS, COLOR: SW7044 AMAZING GRAY, FINISH: EGGSHELL ON VERITICAL PARTITIONS - SEE FINISH PLANS FOR LOCATIONS
PNT3	PAINT (EXPOSED CEILINGS)	MANUFACTURER: SHERWIN WILLIAMS, COLOR: SW7020 BLACK FOX, FINISH: FLAT, COMMENT: LOCATED IN EXPOSED CEILING AREAS ABOVE DATUM LINE ,LOCATED AT 9'-6" AFF
PNT4	PAINT (GYP. CEILINGS)	MANUFACTURER: SHERWIN WILLIAMS, COLOR: SW7005 PURE WHITE, FINISH: FLAT
PWT1	PORCELAIN WALL TILE	MANUFACTURER: DALTILE; COLLECTION: CHORD; COLOR: CH24 BARITONE BEIGE; SIZE: 12X24; FINISH: UNPOLISHED; INSTALLATION: STACKED JOINT, GROUT COLOR: TBD
PWT2	PORCELAIN WALL TILE	MANUFACTURER: DALTILE; COLLECTION: CHORD; COLOR: CH21 ALLEGRO BEIGE; SIZE: 12X24; FINISH: TEXTURED DECORATIVE ACCENT; INSTALLATION: STACKED JOINT, GROUT COLOR: TBD
PWT3	PORCELAIN WALL TILE	MANUFACTURER: DALTILE; COLLECTION: CHORD; COLOR: CH21 ALLEGRO BEIGE; SIZE: 12X24; FINISH: UNPOLISHED; INSTALLATION: STACKED JOINT, GROUT COLOR: TBD
VWC1	VINYL WALLCOVERING	MANUFACTURER: MDC; COLLECTION: MODERN INDUSTRY ; COLOR: GALVANZED 3057MI/4131
VWC2	VINYL WALLCOVERING	MANUFACTURER: MDC; COLLECTION: MODERN INDUSTRY; COLOR: GUNMETAL 3063MI/4131
WD1	WOOD PLANK WALL	AWI PREMIUM GRADE, WHITE OAK QUARTER CUT, PLANKS AND BEAMS, SIZE: 6" WIDE WITH 1/4" REVEAL, CUSTOM STAINED TO MATCH ARCHITECT'S SAMPLES. USE FINISHING NAILS TO ATTACH/SECURE WD-1 TO SUBSTRATE, FINISH ALL HOLES TO MATCH ADJACENT STAINED WOOD FINISH. ALL EXPOSED SURFACES OF WD-1 BEAMS AND PLANKS TO BE OPEN PORE, CUSTOM STAINED AND FINISHED TO MATCH ARCHITECT'S SAMPLE.

CEILING FINISHES

SEE SHEET A3.1 REFLECTED CEILING PLAN FOR SPECIFICATIONS OF CEILING FINISHES

MILLWORK FINISHES		
HPDL1	HIGH PRESSURE DECORATIVE LAMINATE	MANUFACTURER: WILSONART, COLOR: D96-60 SHADOW, COMMENT: PROVIDE MATCHING 3MM EDGE BANDING
HPDL2	HIGH PRESSURE DECORATIVE LAMINATE	MANUFACTURER: LAMINART, COLOR: 3124-E CLASSIC CHERRY, FINISH: VELLUM, COMMENT: PROVIDE MATCHING 3MM EDGE BANDING
HPDL3	HIGH PRESSURE DECORATIVE LAMINATE	MANUFACTURER: WILSONART, COLOR: 4990-38 FLAX LINEN, FINISH: FINE VELVET, COMMENT: PROVIDE MATCHING 3MM EDGE BANDING
SS1	SOLID SURFACE	MANUFACTURER: DURASEIN, COLOR: DM5013 NATURALLY, THICKNESS: 1/2" ; NOTE: SEE MILLWORK SECTIONS FOR COUNTERTOP PROFILES
SS2	SOLID SURFACE	MANUFACTURER: ATLASPLAN, COLOR: MEK BRONZE, THICKNESS: 12MM, FINISH: MATT; NOTE: SEE MILLWORK SECTIONS FOR COUNTERTOP PROFILES
SS3	SOLID SURFACE	MANUFACTURER: CORIAN, COLOR: CREMA, NOTE: SEE MILLWORK SECTIONS FOR COUNTERTOP PROFILES

MISCELLANEOUS FINISHES		
AP	ACRYLIC PANEL	MANUFACTURER: LUMICOR, PRODUCT: LUMINOUS, COLOR: GRAPHITE
CG	CORNER GUARD	MANUFACTURER: INPRO, PRODUCT: IPC 150 HIGH IMPACT, MOUNTING: SURFACE MOUNT, FINISH: 0119 PEPPERDUST
FWP	FABRIC WRAPPED PANEL	3/4"W x 24"H x 36"L PANEL WRAPPED IN FABRIC: CARNEGIE INDEX 6588 12
RS-1	MANUAL ROLLER SHADES	MANUFACTURER: MECHOSHADE, PRODUCT: MECHO/5X, BRACKET: STANDARD WITH FASCIA, FINISH: TBD, SOLAD SHADE: TBD
RS-2	MANUAL DOUBLE ROLLER SHADES	MANUFACTURER: MECHOSHADE, PRODUCT: DOUBLE SHADE, BRACKET: #15 WITH FASCIA, FINISH: TBD, SOLAD SHADE: TBD, BLACKOUT SHADE: TBD, COMMENTS: CONTRACTOR TO PROVIDE ROOM DARKENING CHANNELS FOR BLACKOUT SHADE
RS-3	MOTORIZED ROLLER SHADES	MANUFACTURER: MECHOSHADE, PRODUCT: ELECTRO/2 DOUBLE SHADE, BRACKET: #17 WITH FASCIA, FINISH: TBD, SOLAD SHADE: TBD, BLACKOUT SHADE: TBD, MOTOR: WHISPERSHADE DC, COMMENTS: CONTRACTOR TO PROVIDE ROOM DARKENING CHANNELS FOR BLACKOUT SHADE, COORDINATE POWER AND SWITCHING REQUIREMENTS WITH ELECTRICAL PRIOR TO INSTALLATION
WT	WOOD TRIM	4" PAINT GRADE WOOD TRIM AT CASED OPENINGS TO BE PAINTED TO MATCH ADJACENT WALL FINISH, PROFILE: FLAT STOCK WITH MITERED CORNERS

FLOOR FINISH NOTES

1. THE CONTRACTOR SHALL FLASH ALL CRACKS, HOLES OR OTHER IMPERFECTIONS (PROJECTIONS SHALL BE REMOVED AND PATCHED) TO PROVIDE A CONTINUOUSLY SMOOTH FLOOR SURFACE WITH VARIATION IN LEVEL NOT TO EXCEED 1/4" IN 10'-0" NONCUMULATIVE.
2. ALL NEW FINISH FLOOR SHALL BE INSTALLED BY CONTRACTOR AS SPECIFIED ON FINISH PLANS.
3. ALL WORKMANSHIP SHALL BE OF THE BEST QUALITY IN ACCORDANCE WITH MANUFACTURER'S **MOST STRINGENT** INSTALLATION INSTRUCTIONS. WHEN THE WORK IS COMPLETE, IT SHALL BE FREE FROM BUCKLES, BUBBLES, OPEN JOINTS OR OTHER IMPERFECTIONS. SEAMS SHALL BE KEPT IN ACCURATE ALIGNMENT ALONG BOTH COORDINATES. FINISHES HAVING BEEN CHIPPED OR DAMAGED IN ANY WAY WILL BE REJECTED AND IF INSTALLED, SHALL BE REMOVED AND REPLACED WITH ACCEPTABLE REPLACEMENT AT CONTRACTOR'S EXPENSE.
4. FINISHES SHALL BE LAID IN PATTERN AS INDICATED AND SHOWN ON FINISH SCHEDULE AND FINISH PLAN.
5. TILES SHALL BE SECURELY CEMENTED AND SHALL BE LAID WITH TIGHTEST JOINTS POSSIBLE ACCORDING TO MANUFACTURER'S INSTALLATION INSTRUCTIONS.
6. AREA WHERE FLOOR FINISH IS SCHEDULES SHALL BE CLOSED TO TRAFFIC AND OTHER WORK DURING INSTALLATION OF FINISH FLOOR.
7. UPON COMPLETION, ALL FLOOR FINISH WORK SHALL BE CLEANED BY THE CONTRACTOR, REMOVING ALL SPOTS OF ADHESIVE, SURFACE STAINS, AND ALL DUST, DEBRIS, AND SCRAPS. CARTONS AND CONTAINERS SHALL BE REMOVED FROM THE BUILDING EVERY DAY.
8. FLOORING SHALL MEET ALL CURRENT NON-SLIP STANDARDS AND REQUIREMENTS SPECIFIED BY APPLICABLE CODES AND / OR AUTHORITIES.
9. ACCURATE, DIMENSIONED FLOORING PLANS SHALL BE SUBMITTED TO ARCHITECT FOR APPROVAL PRIOR TO INSTALLATION.
10. CONTRACTOR SHALL COORDINATE WORK OF ALL FLOORING CONTRACTORS TO ENSURE THAT ALL VARYING FLOOR MATERIALS USED ARE INSTALLED FLUSH / LEVEL. ALL TRANSITION METHODS SHALL BE APPROVED BY ARCHITECT PRIOR TO INSTALLATION. ALL FINISH TRANSITIONS INSTALLED AT DOORWAY TO BE CONCEALED BY DOOR WHEN IN CLOSED POSITION, TYPICAL.

WALL FINISH NOTES

1. ALL AREAS ARE TO BE PAINTED IN ACCORDANCE WITH FINISH PLANS UNLESS OTHERWISE NOTED OR SPECIFIED.
2. PAINT COLORS SHALL BE AS SPECIFIED BY ARCHITECT AND THE CONTRACTOR SHALL SUBMIT (3) ARCHITECT/ TENANT 12" X 12" SAMPLES FOR REVIEW.
3. THE CONTRACTOR SHALL USE SPECIFIED PAINT PRODUCTS. IF SUBSTITUTION OF MANUFACTURER IS REQUESTED, THE CONTRACTOR SHALL PROVIDE MANUFACTURER'S LITERATURE, INCLUDING FULL APPLICATION SPECIFICATIONS, TO ARCHITECT/ TENANT APPROVAL IN ADVANCE OF APPLICATION.
4. WALLS SHALL BE DEFINED AS SURFACES FROM FLOOR TO CEILING, INCLUDING PILASTERS, FASCIAS, JAMBS, REVEALS, RETURNS AND ALL VERTICAL SURFACES NOT INCLUDED IN CEILING.
5. INDICATIONS OF EXTENT OF WALL FINISH ARE GRAPHICALLY SYMBOLIC AND DO NOT REPRESENT EVERY JOG, PROTRUSION OR RECESS OCCURRING ON THE ACTUAL CONSTRUCTED SURFACE (NEW OR EXISTING). THE CONTRACTOR SHALL PROVIDE SPECIFIED FINISH ON ALL SURFACES WITHIN THE LIMITS SHOWN ON THE PLANS.
6. COMMENCEMENT OF PAINTING WORK SHALL REPRESENT ACCEPTANCE OF SURFACE CONDITIONS.
7. THE CONTRACTOR SHALL EXAMINE ALL AREAS OF CONSTRUCTION AFTER COMPLETION OF ALL WORK AND PERFORM NECESSARY "TOUCH-UP" PAINTING AND/OR PATCHING.

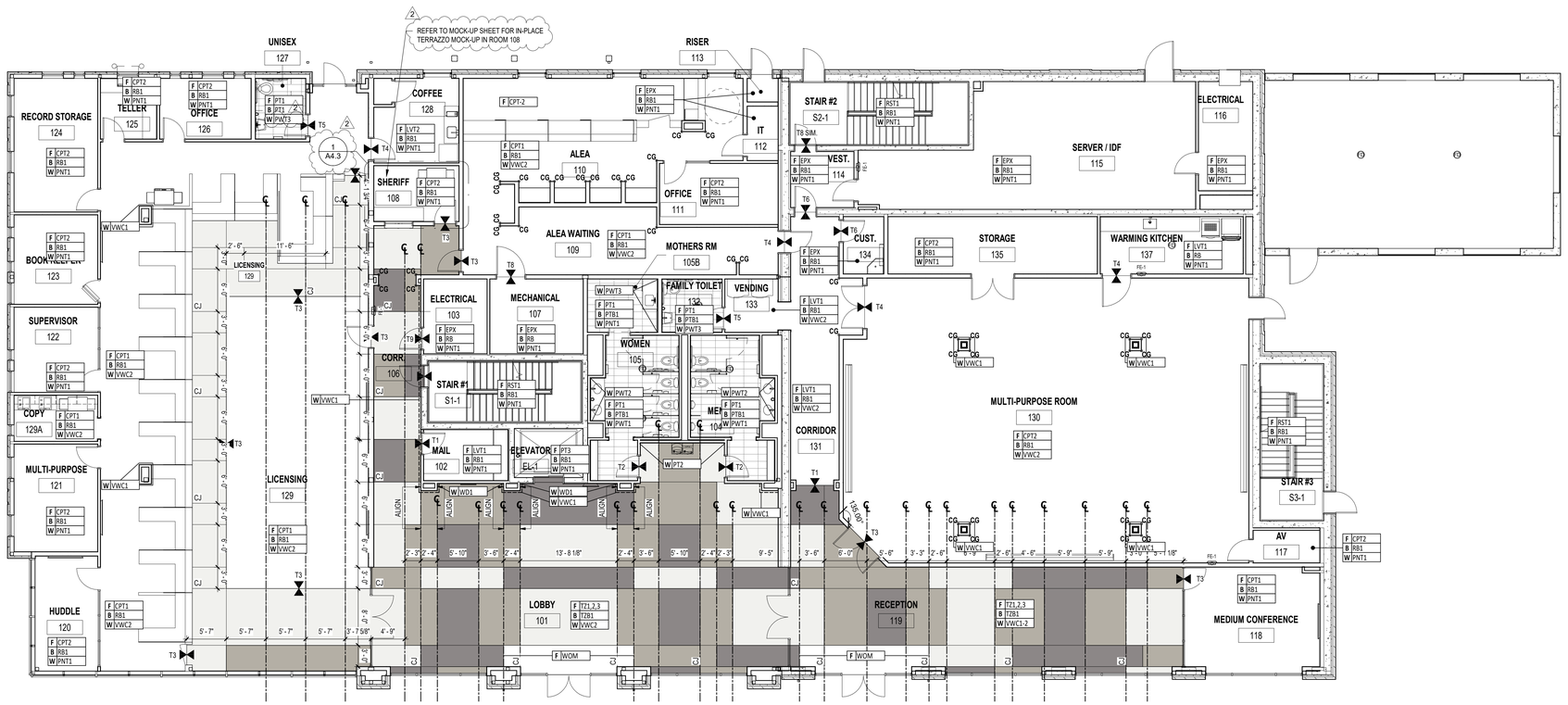

ADDENDUM #1: ADDED CONTROL JOINTS AT TERRAZZO FLOORING

1 A10.1 FIRST FLOOR FINISH PLAN
SCALE 1/8" = 1'-0"

STATE OF ALABAMA
2522 5471
5821 6438
WILLIAMS BLACKSTOCK ARCHITECTS
6191
REGISTERED ARCHITECT

HWY 280 SHELBY COUNTY SERVICES BUILDING
CONSTRUCTION BID PACKAGE
SHELBY COUNTY DEPARTMENT OF DEVELOPMENT SERVICES
19220 US HWY 280, BIRMINGHAM, AL 35242
19-040.00

ARCHITECT OF RECORD :
WILLIAMS· BLACKSTOCK
ARCHITECTS
ARCHITECTURE INTERIORS PLANNING
SUITE 200
2204 FIRST AVENUE SOUTH
BIRMINGHAM, ALABAMA 35233

KEY PLAN :

ISSUE DATE:
03/06/2020

REVISIONS

NO.	DATE	DESCRIPTION
1	03/13/2020	ADDENDUM #1
2	03/20/2020	ADDENDUM #2

PROJECT NUMBER:
19-040.00

DRAWING TITLE:
FIRST FLOOR FINISH PLAN

SHEET NUMBER:
A10.1

FINISH LEGEND

FLOOR FINISHES

CODE	PRODUCT	DESCRIPTION
CC	COATED CONCRETE	MANUFACTURER: DIAMAPRO SYSTEMS, PRODUCT: UV-HS CONCRETE COATING, COLOR: N/A, FINISH: N/A, COMMENTS: SEE SPEC
CPT1	CARPET - MODULAR	MANUFACTURER: MOHAWK, COLLECTION: ICONIC EARTH, PRODUCT: METALMORPHIC, COLOR: 751 PERFECT PATHS METALLIC; DIMENSIONS: 12"x36"; INSTALL: BRICK ASHLAR
CPT2	CARPET - MODULAR	MANUFACTURER: MOHAWK, COLLECTION: ON THE SCENE, PRODUCT: HUSTLE & BUSTLE; COLOR: 837 POSH; DIMENSIONS: 24"x24"; INSTALL: VERTICAL ASHLAR
EPX	EPOXY COATING	MANUFACTURER: TBD, SEE SPEC
LVT1	LUXURY VINYL TILE	MANUFACTURER: MOHAWK, COLLECTION: HOT & HEAVY, PRODUCT: GROWN UP; COLOR: 322 FINN; THICKNESS: 5MM; DIMENSIONS: 9"x59"; INSTALL: VERTICAL ASHLAR
LVT2	LUXURY VINYL TILE	MANUFACTURER: MOHAWK, COLLECTION: HOT & HEAVY, PRODUCT: LINEATE; COLOR: 741 PARALLEL; DIMENSIONS: 9"x59"; INSTALL: SEE FINISH PLANS
LVT3	LUXURY VINYL TILE	MANUFACTURER: MOHAWK, COLLECTION: HOT & HEAVY, PRODUCT: LINEATE; COLOR: 857 MARKER; DIMENSIONS: 9"x59"; INSTALL: SEE FINISH PLANS
LVT4	LUXURY VINYL TILE	MANUFACTURER: MOHAWK, COLLECTION: HOT & HEAVY, PRODUCT: LINEATE; COLOR: 868 GROOVE; DIMENSIONS: 9"x59"; INSTALL: SEE FINISH PLANS
PT1	PORCELAIN TILE FLOOR	MANUFACTURER: DALTILE, PATTERN: CHORD, COLOR: CH24 BARITONE BEIGE, SIZE: 12X24, INSTALL PATTERN: BRICK JOINT - SEE FINISH PLAN
PT2	PORCELAIN TILE FLOOR	MANUFACTURER: DALTILE, PATTERN: CHORD, COLOR: CH21 ALLEGRO BEIGE, SIZE: 12X24, INSTALL PATTERN: BRICK JOINT - SEE FINISH PLAN
RSF1	RUBBER SPORTS TILE FLOOR	MANUFACTURER: MONDO; COLLECTION: RAMFLEX; COLOR: 715, THICKNESS: 6MM, SIZE: 36X36
RST1	RUBBER STAIR TREADS, RISERS, AND LANDING TILE	MANUFACTURER: TARKETT; PRODUCT: RNRDTR TB1 SQ; COLOR: TB1 PEPPERCORN, COMMENT: PROVIDE MATCHING LANDING TILE IN SAME COLOR
TZ1	TERRAZZO	MANUFACTURER: TERROXY, FORMULA #: TM#20-813, EPOXY COLOR: FELTED WOOL 22133, FILLER: ATF-20, AGGREGATE MIX: 30% BLUE COAL, 20% LIGHT BLUE BARDIGLIO, 25% GA WHITE, 15% ASH GRAY GLASS, 10% PLATE GLASS, DIVIDER STRIP MATERIAL: STAINLESS STEEL CONTACT: BRAD HEDGES, PHONE: 770-325-0725 EXT 700, EMAIL: BRAD@SCSIGA.COM
TZ2	TERRAZZO	MANUFACTURER: TERROXY, FORMULA #: TM#20-814, EPOXY COLOR: MINDFUL GRAY 7005, FILLER: ATF-20, AGGREGATE MIX: 20% VALDERS, 20% CRYSTAL GLASS, 10% REBEL GRAY, 20% BEIGE BLEND, 10% GLACIER, 20% GEORGIA WHITE, DIVIDER STRIP MATERIAL: STAINLESS STEEL CONTACT: BRAD HEDGES, PHONE: 770-325-0725 EXT 700, EMAIL: BRAD@SCSIGA.COM
TZ3	TERRAZZO	MANUFACTURER: TERROXY,FORMULA #: TM#20-815, EPOXY COLOR: INTELLECTUAL GRAY 5806, FILLER: ATF-20, AGGREGATE MIX: 20% VALDERS, 20% CRYSTAL GLASS, 10% REBEL GREY, 20% BEIGE BLEND, 10% GLACIER, 20% GEORGIA WHITE, DIVIDER STRIP MATERIAL: STAINLESS STEEL CONTACT: BRAD HEDGES, PHONE: 770-325-0725 EXT 700, EMAIL: BRAD@SCSIGA.COM
WOM	CARPET TILE WALK-OFF MAT	MANUFACTURER: TANDUS; STYLE: ABRASIVE ACTION II D2578; COLOR: WINTER GRAY 19103; SIZE:24"X24" ; INSTALL PATTERN: MONOLITHIC

BASE FINISHES

RB	RUBBER BASE	MANUFACTURER: JOHNSONITE, COLOR: TB1 PEPPERCORN, HEIGHT: 4" COVED, COMMENT: NO PRE-MOLDED CORNERS, MINIMIZE AMOUNT OF CUT PIECES
PTB1	PORCELAIN TILE BASE	MANUFACTURER: DALTILE, COLOR: CH24 BARITONE BEIGE, HEIGHT: 4" COVED
PTB2	PORCELAIN TILE BASE	MANUFACTURER: DALTILE, COLOR: CH21 ALLEGRO BEIGE, HEIGHT: 4" COVED, COMMENT: LOCATED WHERE PWT1 AND PWT3 OCCUR, ALL WALL, FLOOR AND BASE GROUT JOINTS ARE TO ALIGN
TZB1	TERRAZZO BASE	COLOR TO MATCH TZ2

TZ1 TZ2 TZ3 LVT2 LVT3 LVT4

WALL FINISHES

CWT1	CERAMIC WALL TILE	MANUFACTURER: CERAMIC TECHNICS; COLLECTION: STUDIO ELEMENTS HANDMOLDED; COLOR: CLOUD; SIZE: 3X12; FINISH: GLOSSY; INSTALLATION: VERTICAL STACKED JOINT
PNT1	PAINT (GENERAL WALLS)	SHERWIN WILLIAMS: SW6070 HERON PLUME, FINISH: EGGSHELL ON VERTICAL PARTITIONS
PNT2	PAINT (ACCENT WALLS)	MANUFACTURER: SHERWIN WILLIAMS, COLOR: SW7044 AMAZING GRAY, FINISH: EGGSHELL ON VERITICAL PARTITIONS - SEE FINISH PLANS FOR LOCATIONS
PNT3	PAINT (EXPOSED CEILINGS)	MANUFACTURER: SHERWIN WILLIAMS, COLOR: SW7020 BLACK FOX, FINISH: FLAT, COMMENT: LOCATED IN EXPOSED CEILING AREAS ABOVE DATUM LINE LOCATED AT 9'-6" AFF
PNT4	PAINT (GYP. CEILINGS)	MANUFACTURER: SHERWIN WILLIAMS, COLOR: SW7005 PURE WHITE, FINISH: FLAT
PWT1	PORCELAIN WALL TILE	MANUFACTURER: DALTILE; COLLECTION: CHORD; COLOR: CH24 BARITONE BEIGE; SIZE: 12X24; FINISH: UNPOLISHED; INSTALLATION: STACKED JOINT, GROUT COLOR: TBD
PWT2	PORCELAIN WALL TILE	MANUFACTURER: DALTILE; COLLECTION: CHORD; COLOR: CH21 ALLEGRO BEIGE; SIZE: 12X24; FINISH: TEXTURED DECORATIVE ACCENT; INSTALLATION: STACKED JOINT, GROUT COLOR: TBD
PWT3	PORCELAIN WALL TILE	MANUFACTURER: DALTILE; COLLECTION: CHORD; COLOR: CH21 ALLEGRO BEIGE; SIZE: 12X24; FINISH: UNPOLISHED; INSTALLATION: STACKED JOINT, GROUT COLOR: TBD
VWC1	VINYL WALLCOVERING	MANUFACTURER: MDC; COLLECTION: MODERN INDUSTRY ; COLOR: GALVANIZED 3057MI/4131
VWC2	VINYL WALLCOVERING	MANUFACTURER: MDC; COLLECTION: MODERN INDUSTRY; COLOR: GUNMETAL 3063MI/4131
WD1	WOOD PLANK WALL	AWI PREMIUM GRADE. WHITE OAK QUARTER CUT, PLANKS AND BEAMS, SIZE: 6" WIDE WITH 1/4" REVEAL, CUSTOM STAINED TO MATCH ARCHITECT'S SAMPLES. USE FINISHING NAILS TO ATTACHSECURE WD-1 TO SUBSTRATE. FINISH ALL HOLES TO MATCH ADJACENT STAINED WOOD FINISH. ALL EXPOSED SURFACES OF WD-1 BEAMS AND PLANKS TO BE OPEN PORE, CUSTOM STAINED AND FINISHED TO MATCH ARCHITECT'S SAMPLE.

CEILING FINISHES

SEE SHEET A3.1 REFLECTED CEILING PLAN FOR SPECIFICATIONS OF CEILING FINISHES

MILLWORK FINISHES

HPDL1	HIGH PRESSURE DECORATIVE LAMINATE	MANUFACTURER: WILSONART, COLOR: D96-60 SHADOW, COMMENT: PROVIDE MATCHING 3MM EDGE BANDING
HPDL2	HIGH PRESSURE DECORATIVE LAMINATE	MANUFACTURER: LAMINART, COLOR: 3124-E CLASSIC CHERRY, FINISH: VELLUM, COMMENT: PROVIDE MATCHING 3MM EDGE BANDING
HPDL3	HIGH PRESSURE DECORATIVE LAMINATE	MANUFACTURER: WILSONART, COLOR: 4990-38 FLAX LINEN, FINISH: FINE VELVET, COMMENT: PROVIDE MATCHING 3MM EDGE BANDING
SS1	SOLID SURFACE	MANUFACTURER: DURASEIN, COLOR: DM5013 NATURALLY, THICKNESS: 1/2" , NOTE: SEE MILLWORK SECTIONS FOR COUNTERTOP PROFILES
SS2	SOLID SURFACE	MANUFACTURER: ATLASPLAN, COLOR: MEK BRONZE, THICKNESS: 12MM, FINISH: MATT; NOTE: SEE MILLWORK SECTIONS FOR COUNTERTOP PROFILES
SS3	SOLID SURFACE	MANUFACTURER: CORIAN, COLOR: CREMA, NOTE: SEE MILLWORK SECTIONS FOR COUNTERTOP PROFILES

MISCELLANEOUS FINISHES

AP	ACRYLIC PANEL	MANUFACTURER: LUMICOR, PRODUCT: LUMINOUS, COLOR: GRAPHITE
CG	CORNER GUARD	MANUFACTURER: INPRO, PRODUCT: IPC 150 HIGH IMPACT, MOUNTING: SURFACE MOUNT, FINISH: 0119 PEPPERDUST
FWP	FABRIC WRAPPED PANEL	3/4"W x 24"H x 36"L PANEL WRAPPED IN FABRIC: CARNEGIE INDEX 6588.12
RS-1	MANUAL ROLLER SHADES	MANUFACTURER: MECHOSHADE, PRODUCT: MECHO/SX, BRACKET: STANDARD WITH FASCIA, FINISH: TBD, SOLAD SHADE: TBD
RS-2	MANUAL DOUBLE ROLLER SHADES	MANUFACTURER: MECHOSHADE, PRODUCT: DOUBLE SHADE, BRACKET: #15 WITH FASCIA, FINISH: TBD, SOLAD SHADE: TBD, BLACKOUT SHADE: TBD, COMMENTS: CONTRACTOR TO PROVIDE ROOM DARKENING CHANNELS FOR BLACKOUT SHADE
RS-3	MOTORIZED ROLLER SHADES	MANUFACTURER: MECHOSHADE, PRODUCT: ELECTROZ DOUBLE SHADE, BRACKET: #17 WITH FASCIA, FINISH: TBD, SOLAD SHADE: TBD, BLACKOUT SHADE: TBD, MOTOR: WHISPERSHADE DC, COMMENTS: CONTRACTOR TO PROVIDE ROOM DARKENING CHANNELS FOR BLACKOUT SHADE, COORDINATE POWER AND SWITCHING REQUIREMENTS WITH ELECTRICAL PRIOR TO INSTALLATION
WT	WOOD TRIM	4" PAINT GRADE WOOD TRIM AT CASED OPENINGS TO BE PAINTED TO MATCH ADJACENT WALL FINISH, PROFILE: FLAT STOCK WITH MITERED CORNERS

FLOOR FINISH NOTES

1. THE CONTRACTOR SHALL FLASH ALL CRACKS, HOLES OR OTHER IMPERFECTIONS (PROJECTIONS SHALL BE REMOVED AND PATCHED) TO PROVIDE A CONTINUOUSLY SMOOTH FLOOR SURFACE WITH VARIATION IN LEVEL NOT TO EXCEED 1/4" IN 10'-0" NONCUMULATIVE.
2. ALL NEW FINISH FLOOR SHALL BE INSTALLED BY CONTRACTOR AS SPECIFIED ON FINISH PLANS.
3. ALL WORKMANSHIP SHALL BE OF THE BEST QUALITY IN ACCORDANCE WITH MANUFACTURER'S **MOST STRINGENT** INSTALLATION INSTRUCTIONS. WHEN THE WORK IS COMPLETE, IT SHALL BE FREE FROM BUCKLES, BUBBLES, OPEN JOINTS OR OTHER IMPERFECTIONS. SEAMS SHALL BE KEPT IN ACCURATE ALIGNMENT ALONG BOTH COORDINATES. FINISHES HAVING BEEN CHIPPED OR DAMAGED IN ANY WAY WILL BE REJECTED AND IF INSTALLED, SHALL BE REMOVED AND REPLACED WITH ACCEPTABLE REPLACEMENT AT CONTRACTOR'S EXPENSE.
4. FINISHES SHALL BE LAID IN PATTERN AS INDICATED AND SHOWN ON FINISH SCHEDULE AND FINISH PLAN.
5. TILES SHALL BE SECURELY CEMENTED AND SHALL BE LAID WITH TIGHTEST JOINTS POSSIBLE ACCORDING TO MANUFACTURER'S INSTALLATION INSTRUCTIONS.
6. AREA WHERE FLOOR FINISH IS SCHEDULES SHALL BE CLOSED TO TRAFFIC AND OTHER WORK DURING INSTALLATION OF FINISH FLOOR.
7. UPON COMPLETION, ALL FLOOR FINISH WORK SHALL BE CLEANED BY THE CONTRACTOR, REMOVING ALL SPOTS OF ADHESIVE, SURFACE STAINS, AND ALL DUST, DEBRIS, AND SCRAPS. CARTONS AND CONTAINERS SHALL BE REMOVED FROM THE BUILDING EVERY DAY.
8. FLOORING SHALL MEET ALL CURRENT NON-SLIP STANDARDS AND REQUIREMENTS SPECIFIED BY APPLICABLE CODES AND / OR AUTHORITIES.
9. ACCURATE, DIMENSIONED FLOORING PLANS SHALL BE SUBMITTED TO ARCHITECT FOR APPROVAL PRIOR TO INSTALLATION.
10. CONTRACTOR SHALL COORDINATE WORK OF ALL FLOORING CONTRACTORS TO ENSURE THAT ALL VARYING FLOOR MATERIALS USED ARE INSTALLED FLUSH / LEVEL. ALL TRANSITION METHODS SHALL BE APPROVED BY ARCHITECT PRIOR TO INSTALLATION. ALL FINISH TRANSITIONS INSTALLED AT DOORWAY TO BE CONCEALED BY DOOR WHEN IN CLOSED POSITION, TYPICAL.

WALL FINISH NOTES

1. ALL AREAS ARE TO BE PAINTED IN ACCORDANCE WITH FINISH PLANS UNLESS OTHERWISE NOTED OR SPECIFIED.
2. PAINT COLORS SHALL BE AS SPECIFIED BY ARCHITECT AND THE CONTRACTOR SHALL SUBMIT (3) ARCHITECT/ TENANT 12" X 12" SAMPLES FOR REVIEW.
3. THE CONTRACTOR SHALL USE SPECIFIED PAINT PRODUCTS. IF SUBSTITUTION OF MANUFACTURER IS REQUESTED, THE CONTRACTOR SHALL PROVIDE MANUFACTURER'S LITERATURE, INCLUDING FULL APPLICATION SPECIFICATIONS, TO ARCHITECT/ TENANT APPROVAL IN ADVANCE OF APPLICATION.
4. WALLS SHALL BE DEFINED AS SURFACES FROM FLOOR TO CEILING, INCLUDING PILASTERS, FASCIAS, JAMBS, REVEALS, RETURNS AND ALL VERTICAL SURFACES NOT INCLUDED IN CEILING.
5. INDICATIONS OF EXTENT OF WALL FINISH ARE GRAPHICALLY SYMBOLIC AND DO NOT REPRESENT EVERY JOG, PROTRUSION OR RECESS OCCURRING ON THE ACTUAL CONSTRUCTED SURFACE (NEW OR EXISTING). THE CONTRACTOR SHALL PROVIDE SPECIFIED FINISH ON ALL SURFACES WITHIN THE LIMITS SHOWN ON THE PLANS.
6. COMMENCEMENT OF PAINTING WORK SHALL REPRESENT ACCEPTANCE OF SURFACE CONDITIONS.
7. THE CONTRACTOR SHALL EXAMINE ALL AREAS OF CONSTRUCTION AFTER COMPLETION OF ALL WORK AND PERFORM NECESSARY "TOUCH-UP" PAINTING AND/OR PATCHING.

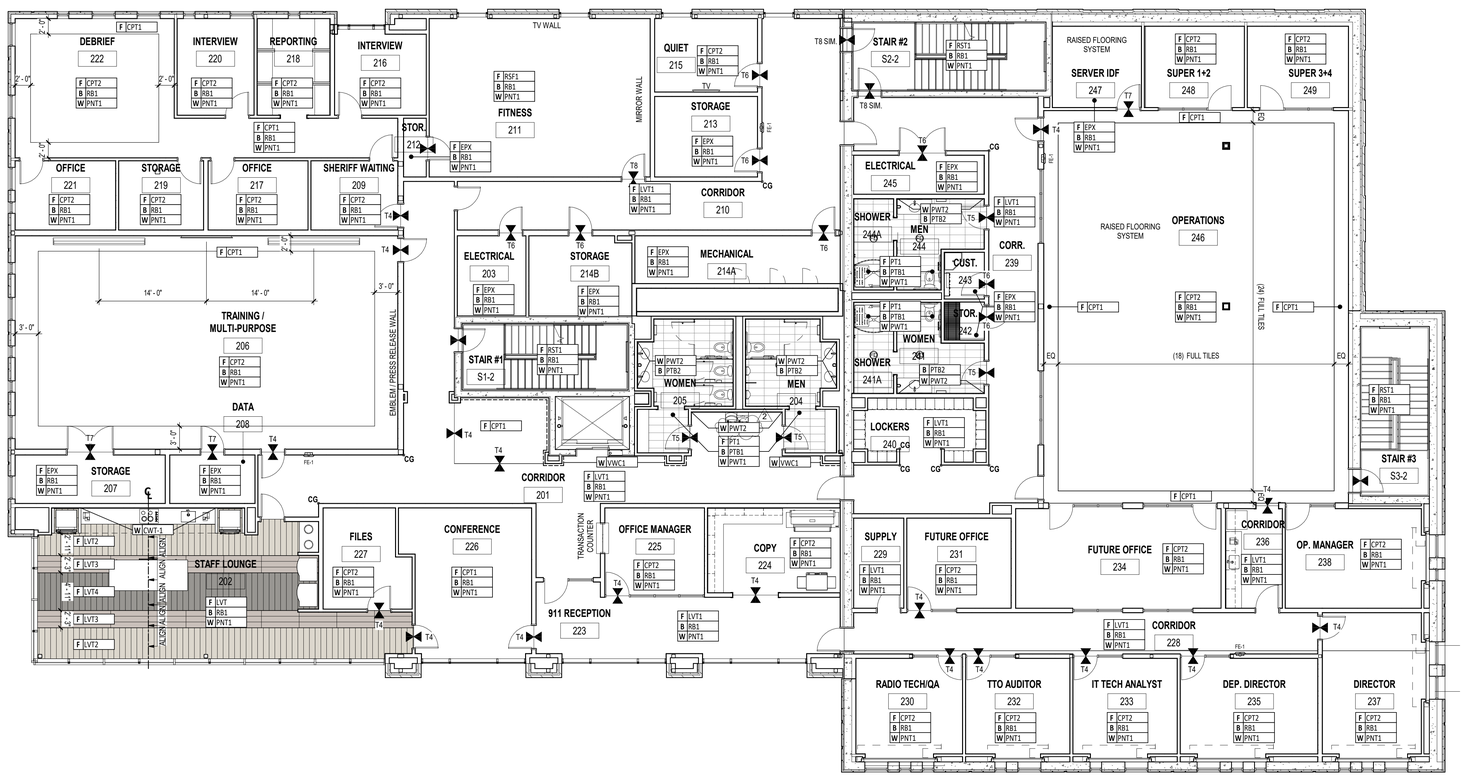

1 SECOND FLOOR FINISH PLAN
A10.2 SCALE: 1/8" = 1'-0"

STATE OF ALABAMA
2522 5471
5821 6438
WILLIAMS BLACKSTOCK ARCHITECTS
6191
REGISTERED ARCHITECT

HWY 280 SHELBY COUNTY SERVICES BUILDING
CONSTRUCTION BID PACKAGE
SHELBY COUNTY DEPARTMENT OF DEVELOPMENT SERVICES
19220 US HWY 280, BIRMINGHAM, AL 35242
19-040.00

ARCHITECT OF RECORD :
WILLIAMS· BLACKSTOCK
ARCHITECTS
ARCHITECTURE INTERIORS PLANNING
SUITE 200
2204 FIRST AVENUE SOUTH
BIRMINGHAM, ALABAMA 35233

KEY PLAN :

ISSUE DATE:
03/06/2020

REVISIONS

NO.	DATE	DESCRIPTION
1	03/13/2020	ADDENDUM #1
2	03/20/2020	ADDENDUM #2

PROJECT NUMBER:
19-040.00

DRAWING TITLE:
SECOND FLOOR FINISH PLAN

SHEET NUMBER:
A10.2

FINISH LEGEND

FLOOR FINISHES

CODE	PRODUCT	DESCRIPTION
CC	COATED CONCRETE	MANUFACTURER: DIAMAPRO SYSTEMS, PRODUCT: UV-HS CONCRETE COATING, COLOR: N/A, FINISH: N/A, COMMENTS: SEE SPEC
CPT1	CARPET - MODULAR	MANUFACTURER: MOHAWK, COLLECTION: ICONIC EARTH, PRODUCT: METALMORPHIC, COLOR: 751 PERFECT PATHS METALLIC; DIMENSIONS: 12"x36"; INSTALL: BRICK ASHLAR
CPT2	CARPET - MODULAR	MANUFACTURER: MOHAWK, COLLECTION: ON THE SCENE, PRODUCT: HUSTLE & BUSTLE; COLOR: 837 POSH; DIMENSIONS: 24"x24"; INSTALL: VERTICAL ASHLAR
EPX	EPOXY COATING	MANUFACTURER: TBD, SEE SPEC
LVT1	LUXURY VINYL TILE	MANUFACTURER: MOHAWK, COLLECTION: HOT & HEAVY, PRODUCT: GROWN UP; COLOR: 322 FINN; THICKNESS: 5MM; DIMENSIONS: 9"x59"; INSTALL: VERTICAL ASHLAR
LVT2	LUXURY VINYL TILE	MANUFACTURER: MOHAWK, COLLECTION: HOT & HEAVY, PRODUCT: LINEATE; COLOR: 741 PARALLEL; DIMENSIONS: 9"x59"; INSTALL: SEE FINISH PLANS
LVT3	LUXURY VINYL TILE	MANUFACTURER: MOHAWK, COLLECTION: HOT & HEAVY, PRODUCT: LINEATE; COLOR: 857 MARKER; DIMENSIONS: 9"x59"; INSTALL: SEE FINISH PLANS
LVT4	LUXURY VINYL TILE	MANUFACTURER: MOHAWK, COLLECTION: HOT & HEAVY, PRODUCT: LINEATE; COLOR: 868 GROOVE; DIMENSIONS: 9"x59"; INSTALL: SEE FINISH PLANS
PT1	PORCELAIN TILE FLOOR	MANUFACTURER: DALTILE, PATTERN: CHORD, COLOR: CH24 BARITONE BEIGE, SIZE: 12X24, INSTALL PATTERN: BRICK JOINT - SEE FINISH PLAN
PT2	PORCELAIN TILE FLOOR	MANUFACTURER: DALTILE, PATTERN: CHORD, COLOR: CH21 ALLEGRO BEIGE, SIZE: 12X24, INSTALL PATTERN: BRICK JOINT - SEE FINISH PLAN
RSF1	RUBBER SPORTS TILE FLOOR	MANUFACTURER: MONDO; COLLECTION: RAMFLEX; COLOR: 715, THICKNESS: 6MM, SIZE: 36X36
RST1	RUBBER STAIR TREADS, RISERS, AND LANDING TILE	MANUFACTURER: TARKETT; PRODUCT: RINRDTR TB1 SQ; COLOR: TB1 PEPPERCORN, COMMENT: PROVIDE MATCHING LANDING TILE IN SAME COLOR
TZ1	TERRAZZO	MANUFACTURER: TERROXY, FORMULA #: TMM20-813, EPOXY COLOR: FELTED WOOL 22133, FILLER: ATF-20, AGGREGATE MIX: 30% BLUE COAL, 20% LIGHT BLUE BARDIGLIO, 25% GA WHITE, 15% ASH GRAY GLASS, 10% PLATE GLASS, DIVIDER STRIP MATERIAL: STAINLESS STEEL CONTACT: BRAD HEDGES, PHONE: 770-325-0725 EXT 700, EMAIL: BRAD@SCSIGA.COM
TZ2	TERRAZZO	MANUFACTURER: TERROXY, FORMULA #: TMM20-814, EPOXY COLOR: MINDFUL GRAY 7005, FILLER: ATF-20, AGGREGATE MIX: 20% VALDERS, 20% CRYSTAL GLASS, 10% REBEL GRAY, 20% BEIGE BLEND, 10% GLACIER, 20% GEORGIA WHITE, DIVIDER STRIP MATERIAL: STAINLESS STEEL CONTACT: BRAD HEDGES, PHONE: 770-325-0725 EXT 700, EMAIL: BRAD@SCSIGA.COM
TZ3	TERRAZZO	MANUFACTURER: TERROXY, FORMULA #: TMM20-815, EPOXY COLOR: INTELLECTUAL GRAY 5806, FILLER: ATF-20, AGGREGATE MIX: 20% VALDERS, 20% CRYSTAL GLASS, 10% REBEL GREY, 20% BEIGE BLEND, 10% GLACIER, 20% GEORGIA WHITE, DIVIDER STRIP MATERIAL: STAINLESS STEEL CONTACT: BRAD HEDGES, PHONE: 770-325-0725 EXT 700, EMAIL: BRAD@SCSIGA.COM
WOM	CARPET TILE WALK-OFF MAT	MANUFACTURER: TANDUS; STYLE: ABRASIVE ACTION II t2578; COLOR: WINTER GRAY 19103; SIZE:24"X24" ; INSTALL PATTERN: MONOLITHIC

BASE FINISHES

RB	RUBBER BASE	MANUFACTURER: JOHNSONITE, COLOR: TB1 PEPPERCORN, HEIGHT: 4" COVED, COMMENT: NO PRE-MOLDED CORNERS, MINIMIZE AMOUNT OF CUT PIECES
PTB1	PORCELAIN TILE BASE	MANUFACTURER: DALTILE, COLOR: CH24 BARITONE BEIGE, HEIGHT: 4" COVED
PTB2	PORCELAIN TILE BASE	MANUFACTURER: DALTILE, COLOR: CH21 ALLEGRO BEIGE, HEIGHT: 4" COVED, COMMENT: LOCATED WHERE PWT1 AND PWT3 OCCUR, ALL WALL, FLOOR AND BASE GROUT JOINTS ARE TO ALIGN
TZB1	TERRAZZO BASE	COLOR TO MATCH TZ2

TZ1 TZ2 TZ3 LVT2 LVT3 LVT4

WALL FINISHES

CWT1	CERAMIC WALL TILE	MANUFACTURER: CERAMIC TECHNICS; COLLECTION: STUDIO ELEMENTS HANDMOLDED; COLOR: CLOUD; SIZE: 3X12; FINISH: GLOSSY; INSTALLATION: VERTICAL STACKED JOINT
PNT1	PAINT (GENERAL WALLS)	SHERWIN WILLIAMS: SW6070 HERON PLUME, FINISH: EGGSHELL ON VERTICAL PARTITIONS
PNT2	PAINT (ACCENT WALLS)	MANUFACTURER: SHERWIN WILLIAMS, COLOR: SW7044 AMAZING GRAY, FINISH: EGGSHELL ON VERITICAL PARTITIONS - SEE FINISH PLANS FOR LOCATIONS
PNT3	PAINT (EXPOSED CEILINGS)	MANUFACTURER: SHERWIN WILLIAMS, COLOR: SW7020 BLACK FOX, FINISH: FLAT, COMMENT: LOCATED IN EXPOSED CEILING AREAS ABOVE DATUM LINE LOCATED AT 9'-6" AFF
PNT4	PAINT (GYP. CEILINGS)	MANUFACTURER: SHERWIN WILLIAMS, COLOR: SW7005 PURE WHITE, FINISH: FLAT
PWT1	PORCELAIN WALL TILE	MANUFACTURER: DALTILE; COLLECTION: CHORD; COLOR: CH24 BARITONE BEIGE; SIZE: 12X24; FINISH: UNPOLISHED; INSTALLATION: STACKED JOINT, GROUT COLOR: TBD
PWT2	PORCELAIN WALL TILE	MANUFACTURER: DALTILE; COLLECTION: CHORD; COLOR: CH21 ALLEGRO BEIGE; SIZE: 12X24; FINISH: TEXTURED DECORATIVE ACCENT; INSTALLATION: STACKED JOINT, GROUT COLOR: TBD
PWT3	PORCELAIN WALL TILE	MANUFACTURER: DALTILE; COLLECTION: CHORD; COLOR: CH21 ALLEGRO BEIGE; SIZE: 12X24; FINISH: UNPOLISHED; INSTALLATION: STACKED JOINT, GROUT COLOR: TBD
VWC1	VINYL WALLCOVERING	MANUFACTURER: MDC; COLLECTION: MODERN INDUSTRY ; COLOR: GALVANIZED 3057MI/4131
VWC2	VINYL WALLCOVERING	MANUFACTURER: MDC; COLLECTION: MODERN INDUSTRY; COLOR: GUNMETAL 3063MI/4131
WD1	WOOD PLANK WALL	AWI PREMIUM GRADE, WHITE OAK QUARTER CUT, PLANKS AND BEAMS, SIZE: 6" WIDE WITH 1/4" REVEAL, CUSTOM STAINED TO MATCH ARCHITECT'S SAMPLES. USE FINISHING NAILS TO ATTACH/SECURE WD-1 TO SUBSTRATE, FINISH ALL HOLES TO MATCH ADJACENT STAINED WOOD FINISH. ALL EXPOSED SURFACES OF WD-1 BEAMS AND PLANKS TO BE OPEN PORE, CUSTOM STAINED AND FINISHED TO MATCH ARCHITECT'S SAMPLE.

CEILING FINISHES

SEE SHEET A3.1 REFLECTED CEILING PLAN FOR SPECIFICATIONS OF CEILING FINISHES

MILLWORK FINISHES

HPDL1	HIGH PRESSURE DECORATIVE LAMINATE	MANUFACTURER: WILSONART, COLOR: D96-60 SHADOW, COMMENT: PROVIDE MATCHING 3MM EDGE BANDING
HPDL2	HIGH PRESSURE DECORATIVE LAMINATE	MANUFACTURER: LAMINART, COLOR: 3124-E CLASSIC CHERRY, FINISH: VELLUM, COMMENT: PROVIDE MATCHING 3MM EDGE BANDING
HPDL3	HIGH PRESSURE DECORATIVE LAMINATE	MANUFACTURER: WILSONART, COLOR: 4990-38 FLAX LINEN, FINISH: FINE VELVET, COMMENT: PROVIDE MATCHING 3MM EDGE BANDING
SS1	SOLID SURFACE	MANUFACTURER: DURASEIN, COLOR: DM5013 NATURALLY, THICKNESS: 1/2" ; NOTE: SEE MILLWORK SECTIONS FOR COUNTERTOP PROFILES
SS2	SOLID SURFACE	MANUFACTURER: ATLASPLAN, COLOR: MEK BRONZE, THICKNESS: 12MM, FINISH: MATT; NOTE: SEE MILLWORK SECTIONS FOR COUNTERTOP PROFILES
SS3	SOLID SURFACE	MANUFACTURER: CORIAN, COLOR: CREMA, NOTE: SEE MILLWORK SECTIONS FOR COUNTERTOP PROFILES

MISCELLANEOUS FINISHES

AP	ACRYLIC PANEL	MANUFACTURER: LUMICOR, PRODUCT: LUMINOUS, COLOR: GRAPHITE
CG	CORNER GUARD	MANUFACTURER: INPRO, PRODUCT: IPC 150 HIGH IMPACT, MOUNTING: SURFACE MOUNT, FINISH: 0119 PEPPERDUST
FWP	FABRIC WRAPPED PANEL	3/4"W x 24"H x 36"L PANEL WRAPPED IN FABRIC; CARNEGIE INDEX 6588 12
RS-1	MANUAL ROLLER SHADES	MANUFACTURER: MECHOSHADE, PRODUCT: MECHO/5X, BRACKET: STANDARD WITH FASCIA, FINISH: TBD, SOLAD SHADE: TBD
RS-2	MANUAL DOUBLE ROLLER SHADES	MANUFACTURER: MECHOSHADE, PRODUCT: DOUBLE SHADE, BRACKET: #15 WITH FASCIA, FINISH: TBD, SOLAD SHADE: TBD, BLACKOUT SHADE: TBD, COMMENTS: CONTRACTOR TO PROVIDE ROOM DARKENING CHANNELS FOR BLACKOUT SHADE
RS-3	MOTORIZED ROLLER SHADES	MANUFACTURER: MECHOSHADE, PRODUCT: ELECTRO/2 DOUBLE SHADE, BRACKET: #17 WITH FASCIA, FINISH: TBD, SOLAD SHADE: TBD, BLACKOUT SHADE: TBD, MOTOR: WHISPERSHADE DC, COMMENTS: CONTRACTOR TO PROVIDE ROOM DARKENING CHANNELS FOR BLACKOUT SHADE; COORDINATE POWER AND SWITCHING REQUIREMENTS WITH ELECTRICAL PRIOR TO INSTALLATION
WT	WOOD TRIM	4" PAINT GRADE WOOD TRIM AT CASED OPENINGS TO BE PAINTED TO MATCH ADJACENT WALL FINISH, PROFILE: FLAT STOCK WITH MITERED CORNERS

FLOOR FINISH NOTES

1. THE CONTRACTOR SHALL FLASH ALL CRACKS, HOLES OR OTHER IMPERFECTIONS (PROJECTIONS SHALL BE REMOVED AND PATCHED) TO PROVIDE A CONTINUOUSLY SMOOTH FLOOR SURFACE WITH VARIATION IN LEVEL NOT TO EXCEED 1/4" IN 10'-0" NONCUMULATIVE.
2. ALL NEW FINISH FLOOR SHALL BE INSTALLED BY CONTRACTOR AS SPECIFIED ON FINISH PLANS.
3. ALL WORKMANSHIP SHALL BE OF THE BEST QUALITY IN ACCORDANCE WITH MANUFACTURER'S **MOST STRINGENT** INSTALLATION INSTRUCTIONS. WHEN THE WORK IS COMPLETE, IT SHALL BE FREE FROM BUCKLES, BUBBLES, OPEN JOINTS OR OTHER IMPERFECTIONS. SEAMS SHALL BE KEPT IN ACCURATE ALIGNMENT ALONG BOTH COORDINATES. FINISHES HAVING BEEN CHIPPED OR DAMAGED IN ANY WAY WILL BE REJECTED AND IF INSTALLED, SHALL BE REMOVED AND REPLACED WITH ACCEPTABLE REPLACEMENT AT CONTRACTOR'S EXPENSE.
4. FINISHES SHALL BE LAID IN PATTERN AS INDICATED AND SHOWN ON FINISH SCHEDULE AND FINISH PLAN.
5. TILES SHALL BE SECURELY CEMENTED AND SHALL BE LAID WITH TIGHTEST JOINTS POSSIBLE ACCORDING TO MANUFACTURER'S INSTALLATION INSTRUCTIONS.
6. AREA WHERE FLOOR FINISH IS SCHEDULES SHALL BE CLOSED TO TRAFFIC AND OTHER WORK DURING INSTALLATION OF FINISH FLOOR.
7. UPON COMPLETION, ALL FLOOR FINISH WORK SHALL BE CLEANED BY THE CONTRACTOR, REMOVING ALL SPOTS OF ADHESIVE, SURFACE STAINS, AND ALL DUST, DEBRIS, AND SCRAPS. CARTONS AND CONTAINERS SHALL BE REMOVED FROM THE BUILDING EVERY DAY.
8. FLOORING SHALL MEET ALL CURRENT NON-SLIP STANDARDS AND REQUIREMENTS SPECIFIED BY APPLICABLE CODES AND / OR AUTHORITIES.
9. ACCURATE, DIMENSIONED FLOORING PLANS SHALL BE SUBMITTED TO ARCHITECT FOR APPROVAL PRIOR TO INSTALLATION.
10. CONTRACTOR SHALL COORDINATE WORK OF ALL FLOORING CONTRACTORS TO ENSURE THAT ALL VARYING FLOOR MATERIALS USED ARE INSTALLED FLUSH / LEVEL. ALL TRANSITION METHODS SHALL BE APPROVED BY ARCHITECT PRIOR TO INSTALLATION. ALL FINISH TRANSITIONS INSTALLED AT DOORWAY TO BE CONCEALED BY DOOR WHEN IN CLOSED POSITION, TYPICAL.

WALL FINISH NOTES

1. ALL AREAS ARE TO BE PAINTED IN ACCORDANCE WITH FINISH PLANS UNLESS OTHERWISE NOTED OR SPECIFIED.
2. PAINT COLORS SHALL BE AS SPECIFIED BY ARCHITECT AND THE CONTRACTOR SHALL SUBMIT (3) ARCHITECT/ TENANT 12" X 12" SAMPLES FOR REVIEW.
3. THE CONTRACTOR SHALL USE SPECIFIED PAINT PRODUCTS. IF SUBSTITUTION OF MANUFACTURER IS REQUESTED, THE CONTRACTOR SHALL PROVIDE MANUFACTURER'S LITERATURE, INCLUDING FULL APPLICATION SPECIFICATIONS, TO ARCHITECT/ TENANT APPROVAL IN ADVANCE OF APPLICATION.
4. WALLS SHALL BE DEFINED AS SURFACES FROM FLOOR TO CEILING, INCLUDING PILASTERS, FASCIAS, JAMBS, REVEALS, RETURNS AND ALL VERTICAL SURFACES NOT INCLUDED IN CEILING.
5. INDICATIONS OF EXTENT OF WALL FINISH ARE GRAPHICALLY SYMBOLIC AND DO NOT REPRESENT EVERY JOG, PROTRUSION OR RECESS OCCURRING ON THE ACTUAL CONSTRUCTED SURFACE (NEW OR EXISTING). THE CONTRACTOR SHALL PROVIDE SPECIFIED FINISH ON ALL SURFACES WITHIN THE LIMITS SHOWN ON THE PLANS.
6. COMMENCEMENT OF PAINTING WORK SHALL REPRESENT ACCEPTANCE OF SURFACE CONDITIONS.
7. THE CONTRACTOR SHALL EXAMINE ALL AREAS OF CONSTRUCTION AFTER COMPLETION OF ALL WORK AND PERFORM NECESSARY "TOUCH-UP" PAINTING AND/OR PATCHING.

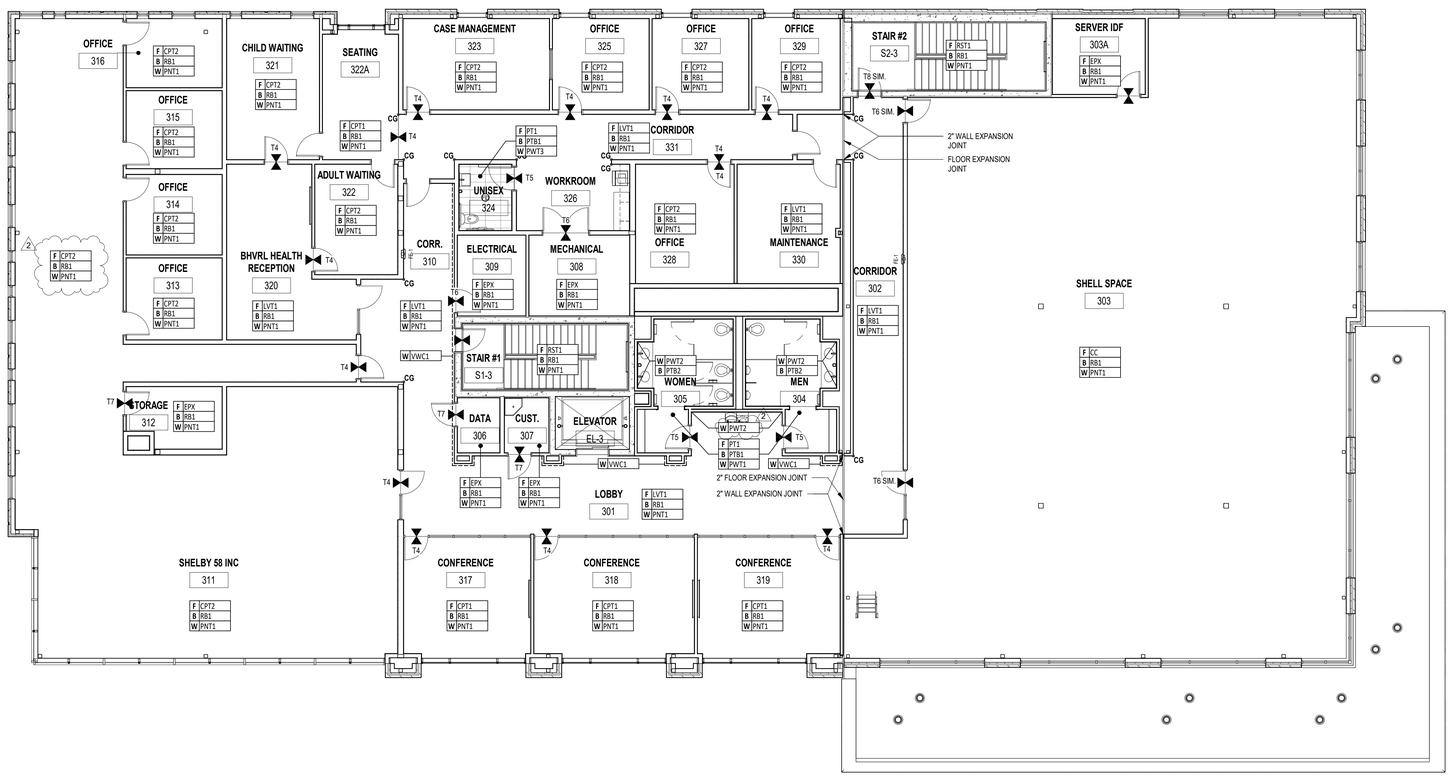

1 A10.3 THIRD FLOOR FINISH PLAN
SCALE 1/8" = 1'-0"

STATE OF ALABAMA
2522 5471
5821 6438
WILLIAMS BLACKSTOCK ARCHITECTS
6191
REGISTERED ARCHITECT

HWY 280 SHELBY COUNTY SERVICES BUILDING
CONSTRUCTION BID PACKAGE
SHELBY COUNTY DEPARTMENT OF DEVELOPMENT SERVICES
19220 US HWY 280, BIRMINGHAM, AL 35242
19-040.00

ARCHITECT OF RECORD :
WILLIAMS· BLACKSTOCK
ARCHITECTS
ARCHITECTURE INTERIORS PLANNING
SUITE 200
2204 FIRST AVENUE SOUTH
BIRMINGHAM, ALABAMA 35233

KEY PLAN :

ISSUE DATE:
03/06/2020

REVISIONS

NO.	DATE	DESCRIPTION
1	03/13/2020	ADDENDUM #1
2	03/20/2020	ADDENDUM #2

PROJECT NUMBER:
19-040.00

DRAWING TITLE:
THIRD FLOOR FINISH PLAN

SHEET NUMBER:
A10.3

SDG
STRUCTURAL DESIGN GROUP
300 Chase Park South, Suite 125
Hoover, AL 35244
tel 205-824-5200
fax 205-824-5280
Job Number **19-173**

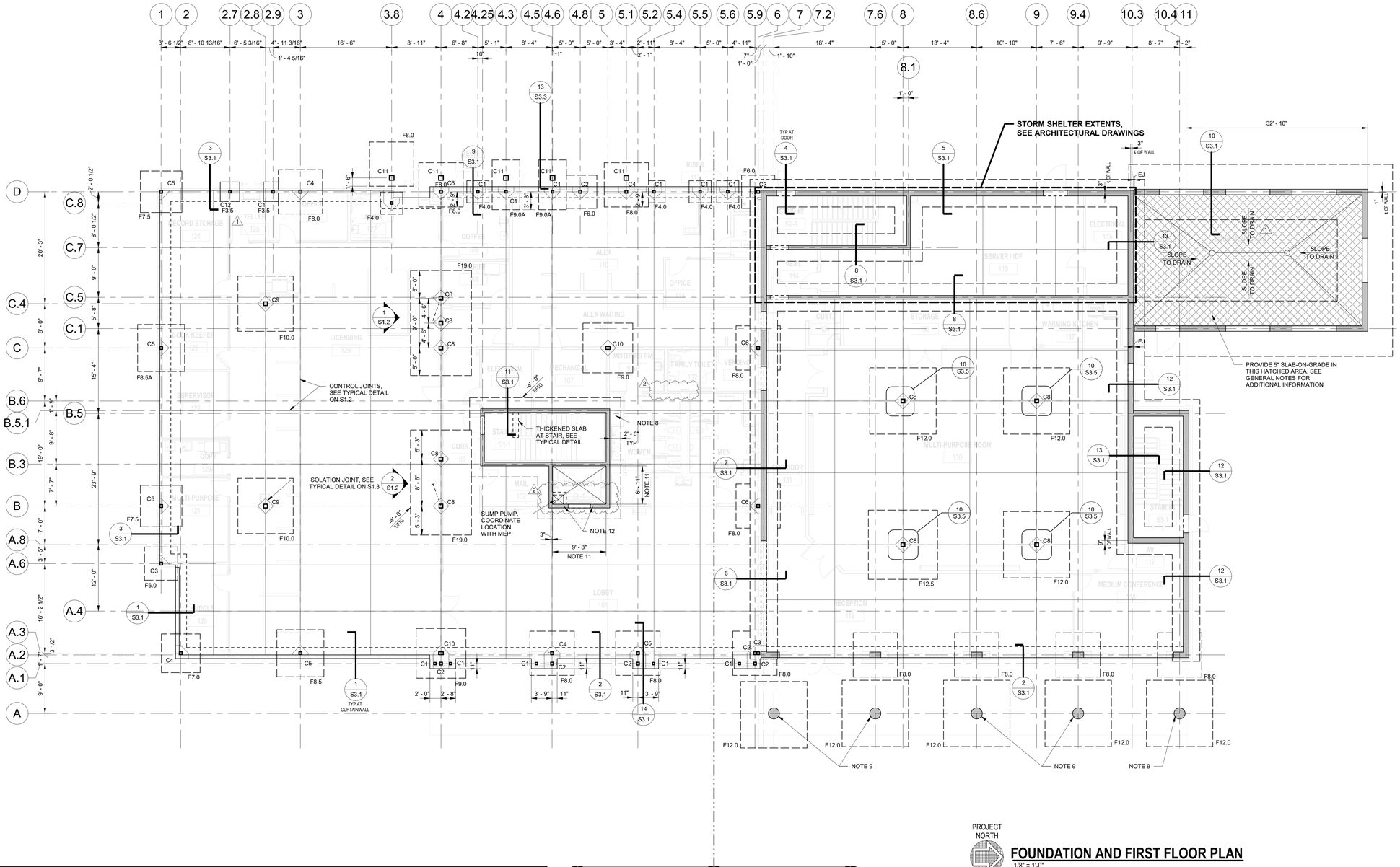

PROJECT NORTH

FOUNDATION AND FIRST FLOOR PLAN

1/8" = 1'-0"

1. FINISH FLOOR (TOP OF SLAB) ELEVATION 0'-0", UNLESS NOTED.
2. TOP OF FOOTING ELEVATION -2'-0", UNLESS NOTED.
3. FOR SLAB ON GRADE CONSTRUCTION, SEE GENERAL NOTES AND TYPICAL DETAILS.
4. FOR SLAB RECESS AND RAMP LOCATIONS, SEE ARCHITECTURAL DRAWINGS.
5. GENERAL CONTRACTOR SHALL COORDINATE TILE AND TERRAZZO JOINT LOCATIONS WITH CONTROL JOINTS. 2
6. 'Cx' INDICATES COLUMN DESIGNATION. SEE SCHEDULE ON S1.3 FOR ADDITIONAL INFORMATION.
7. 'Fx' INDICATES FOOTING DESIGNATION. SEE SCHEDULE ON S1.3 FOR ADDITIONAL INFORMATION.
8. PROVIDE 1'-6" DEEP MAT FOUNDATION BELOW STAIR AND ELEVATOR. EXTEND 2'-0" PAST EXTERIOR FACE OF STAIR AND ELEVATOR AS SHOWN AND REINFORCE WITH #6@12 T&B IN EACH DIRECTION.
9. ARCHITECTURALLY EXPOSED CONCRETE. SEE ARCHITECTURAL DRAWINGS AND SPECIFICATIONS FOR ADDITIONAL REQUIREMENTS.
10. GEOTECHNICAL ENGINEER TO REVIEW SOIL AT SITE AFTER EXISTING BUILDING IS DEMOLISHED AND SITE IS CLEAR. GEOTECHNICAL ENGINEER TO PROVIDE GUIDANCE ON EXTENT OF RAMMED AGGREGATE PIER INSTALLATION BASED ON FIELD CONDITIONS PRIOR TO INSTALLATION OF FOUNDATION SYSTEM.
11. COORDINATE FINAL ELEVATOR SHAFT/PIT DIMENSIONS AFTER ELEVATOR SELECTED.
12. LEAVE OUT CONCRETE WALL FOR ELEVATOR INSTALLATION. SEE ARCHITECTURAL DRAWINGS FOR EXACT REQUIREMENTS AT EACH LEVEL. CONTRACTOR COORDINATE REQUIREMENTS WITH ELEVATOR MANUFACTURER. FOR INFILL, SEE ARCHITECTURAL DRAWINGS.
13. NOT USED. 2

COLUMN AND FOUNDATION SCHEDULE

	COLUMN DESIGNATION		A7.2	A7.8	A8.6	A9.4	A11.9	A.2/7.2	A.2/7.8	A.2/8.6	A.2/9.4	A.2/11.9
COLUMN	ROOF	SIZE	-	-	-	-	-	-	-	-	-	-
		VERTICALS	-	-	-	-	-	-	-	-	-	-
		TIES	-	-	-	-	-	-	-	-	-	-
	3RD LEVEL	NOTES	-	-	-	-	-	-	-	-	-	-
		SIZE	-	-	-	-	-	-	-	-	-	-
		VERTICALS	-	-	-	-	-	-	-	-	-	-
		TIES	-	-	-	-	-	-	-	-	-	-
	2ND LEVEL	NOTES	-	-	-	-	-	-	-	-	-	-
		SIZE	24"Ø	24"Ø	24"Ø	24"Ø	24"Ø	12x40	12x24	12x24	12x24	12x33
		VERTICALS	11#9	11#9	11#9	11#9	11#9	14#7	10#7	10#7	10#7	12#7
		TIES	#3@10	#3@10	#3@10	#3@10	#3@10	#3@10	#3@10	#3@10	#3@10	#3@10
	GROUND FLOOR	NOTES	-	-	-	-	-	-	-	-	-	-
FOOTING		SIZE	SEE	SEE	SEE	SEE	SEE	SEE	SEE	SEE	SEE	SEE
		DEPTH	FOOTING	FOOTING	FOOTING	FOOTING	FOOTING	FOOTING	FOOTING	FOOTING	FOOTING	FOOTING
		REINF EW BOT	SCHEDULE	SCHEDULE	SCHEDULE	SCHEDULE	SCHEDULE	SCHEDULE	SCHEDULE	SCHEDULE	SCHEDULE	SCHEDULE
		REINF EW TOP										
		MAX AXIAL SERVICE LOAD (KIP)										
		NOTES										

ALABAMA REGISTERED PROFESSIONAL No. 17333 J. STEWART GEE
03/06/2020

HWY 280 SHELBY COUNTY SERVICES BUILDING
CONSTRUCTION BID PACKAGE
SHELBY COUNTY DEPARTMENT OF DEVELOPMENT SERVICES
19220 US HWY 280, BIRMINGHAM, AL 35242
19-040.00

ARCHITECT OF RECORD :
WILLIAMS· BLACKSTOCK
ARCHITECTS
ARCHITECTURE INTERIORS PLANNING
SUITE 200
2204 FIRST AVENUE SOUTH
BIRMINGHAM, ALABAMA 35233

KEY PLAN :

ISSUE DATE:
03/06/2020

REVISIONS

NO.	DATE	DESCRIPTION
1	3-13-2020	ADDENDUM 1
2	3-20-2020	ADDENDUM 2

PROJECT NUMBER:
19-040.00

DRAWING TITLE:
FOUNDATION AND FIRST FLOOR PLAN

SHEET NUMBER:
S2.1

SDG
STRUCTURAL DESIGN GROUP
300 Chase Park South, Suite 125
Hoover, AL 35244
tel 205-824-5200
fax 205-824-5280
Job Number **19-173**

ALABAMA REGISTERED No. 17333 PROFESSIONAL J. STEWART LEE ENGINEER
03/06/2020

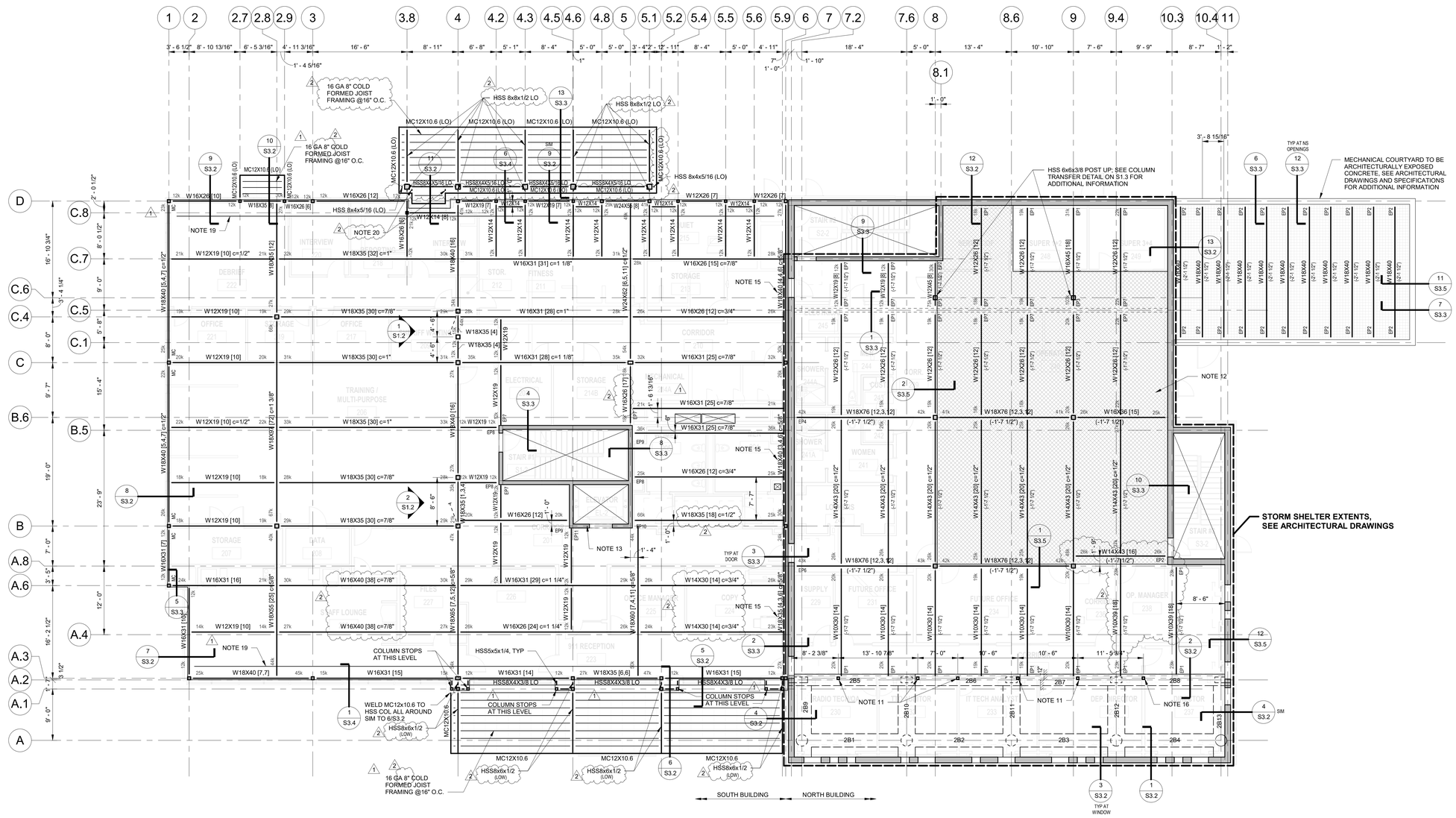

PROJECT NORTH

SECOND FLOOR FRAMING PLAN

1/8" = 1'-0"

1. FINISH FLOOR ELEVATION 15'-0", SEE PLAN
2. TOP OF STEEL ELEVATION -0'-7", UNLESS NOTED
3. FLOOR SYSTEM:
   NORTH BUILDING: 4 1/2" NORMAL WEIGHT CONCRETE ON 3", 18 GAGE GALVANIZED COMPOSITE METAL DECK (7 1/2" TOTAL), UNLESS NOTED OTHERWISE, SEE GENERAL NOTES.
   SOUTH BUILDING: 4" NORMAL WEIGHT CONCRETE ON 3", 18 GAGE GALVANIZED COMPOSITE METAL DECK (7" TOTAL), UNLESS NOTED OTHERWISE, SEE GENERAL NOTES.
4. SPACE BEAMS EQUALLY BETWEEN COLUMN CENTERLINES, UNLESS NOTED.
5. [X] INDICATES NUMBER OF 3/4"ø HEADED STUDS SPACED UNIFORMLY ALONG MEMBER WHERE SINGLE VALUE IS GIVEN. SPACE UNIFORMLY ALONG A PART OF MEMBER BETWEEN SUPPORTED BEAMS, OR COLUMN AND BEAM, WHERE MORE THAN ONE VALUE IS GIVEN. SEE GENERAL NOTES.
6. FOR COMPOSITE BEAMS WITHOUT SHEAR STUD DESIGNATION, PROVIDE MINIMUM SPACING PER GENERAL NOTES.
7. BEAM REACTIONS ARE INDICATED AT ENDS OF BEAMS AS 'Xk' WHERE 'X' IS THE MAGNITUDE OF THE SERVICE LEVEL (UNFACTORED) SHEAR REACTION IN KIPS. REACTIONS SHOWN ON PLANS DO NOT INCLUDE VERTICAL COMPONENT OF AXIAL FORCES IN BEAMS.
8. COORDINATE MECHANICAL OPENING SIZE AND LOCATION WITH MECHANICAL DRAWINGS AND UNIT MANUFACTURER.
9. 'MC' INDICATES MOMENT CONNECTION, SEE DETAILS ON S1.3 FOR ADDITIONAL INFORMATION.
10. 'EPx' INDICATES EMBED PLATE, SEE DETAILS ON S1.3 FOR ADDITIONAL INFORMATION.
11. HSS 5x5x5/16 POST UP WITH 3/4x12x12 BASEPLATE AND (4) 3/4"ø ANCHOR RODS WITH 12" OF EMBEDMENT.
12. HATCHED AREA REPRESENTS RAISED FLOOR SYSTEM, SEE ARCHITECTURAL DRAWINGS FOR ADDITIONAL INFORMATION.
13. LEAVE OUT CONCRETE WALL FOR ELEVATOR INSTALLATION, SEE ARCHITECTURAL DRAWINGS FOR EXACT REQUIREMENTS AT EACH LEVEL. CONTRACTOR COORDINATE REQUIREMENTS WITH ELEVATOR MANUFACTURER. FOR INFILL, SEE ARCHITECTURAL DRAWINGS.
14. COORDINATE MECHANICAL OPENING SIZE AND LOCATION WITH MECHANCIAL DRAWINGS AND UNIT MANUFACTURER. SEE SLAB REINFORCING DETAILS AT OPENINGS ON S1.3.
15. PROVIDE 3/4"Øx4 1/2" LONG HEADED STUD FOR BEAMS ALONG GRID LINE 6. CONTRACTOR COORDINATE DEPTH OF EXPANSION JOINT BLOCKOUT AND VERIFY 1" OF CONCRETE COVER BEYOND HEAD OF STUD IS PROVIDED.
16. HSS 5x5x1/2 POST UP WITH 3/4x12x12 BASE PLATE AND (4) 3/4"Ø ANCHOR RODS WITH 12" OF EMBEDMENT.
17. NOT USED.
18. PROVIDE CLOSURE PLATE AT EDGE OF SLAB AND EXTEND AS REQUIRED.
19. ~~PROVIDE (2) #4 BARS CONTINUOUS ALONG EDGE OF SLAB WHERE INDICATED.~~
20. PROVIDE HSS 8x4x5/16 FROM END OF MC TO PERPENDICULAR HSS; PROVIDE 5/16" CAP PLATE AT OPEN END; WELD HSS 8x4 ALL AROUND EACH END.

BEAM SCHEDULE

BEAM NO.	SIZE WxD	LONGITUDINAL STEEL						STIRRUPS-#3 UNLESS NOTED		NOTES
		A	B	C	D	E	E-LOCATION	TYPE	SPACING-EACH END	
2B1	28x29	3#9	2#8	2#9	2#9	---	---	3	BAL @12	---
2B2	28x29	3#9	2#8	---	3#8	---	---	3	BAL @12	---
2B3	28x29	3#9	2#8	---	3#8	---	---	3	BAL @12	---
2B4	28x29	3#9	2#8	2#9	2#9	---	---	3	BAL @12	---
2B5	24x32	3#9	1#9	2#9	3#9	---	---	4	BAL @10	---
2B6	24x32	3#9	1#9	---	3#9	---	---	4	BAL @10	---
2B7	24x32	3#9	1#9	---	3#9	---	---	4	BAL @10	---
2B8	24x32	3#9	1#9	2#9	3#9	---	---	4	BAL @10	---
2B9	48x29	5#9	---	---	10#10	---	---	4	8@4 IN CANTILEVER; BAL @12	1,2
2B10	36x29	5#9	---	---	8#10	---	---	3	8@4 IN CANTILEVER; BAL @12	1,2
2B11	36x29	5#9	---	---	8#10	---	---	3	8@4 IN CANTILEVER; BAL @12	1,2
2B12	36x29	5#9	---	---	8#10	---	---	3	8@4 IN CANTILEVER; BAL @12	1,2
2B13	36x29	5#9	---	---	8#10	---	---	4	8@4 IN CANTILEVER; BAL @12	1,2

NOTES:
1. EXTEND A-BARS TO END OF CANTILEVER.
2. EXTEND D-BARS TO END OF CANTILEVER AND HOOK.

HWY 280 SHELBY COUNTY SERVICES BUILDING
CONSTRUCTION BID PACKAGE
SHELBY COUNTY DEPARTMENT OF DEVELOPMENT SERVICES
19220 US HWY 280, BIRMINGHAM, AL 35242
19-040.00

ARCHITECT OF RECORD:
WILLIAMS· BLACKSTOCK ARCHITECTS
ARCHITECTURE INTERIORS PLANNING
SUITE 200
2204 FIRST AVENUE SOUTH
BIRMINGHAM, ALABAMA 35233

KEY PLAN:

ISSUE DATE:
03/06/2020

REVISIONS

NO.	DATE	DESCRIPTION
1	3-13-2020	ADDENDUM 1
2	3-20-2020	ADDENDUM 2

PROJECT NUMBER:
19-040.00

DRAWING TITLE:
SECOND FLOOR FRAMING PLAN

SHEET NUMBER:
S2.2

SDG
STRUCTURAL DESIGN GROUP
300 Chase Park South, Suite 125
Hoover, AL 35244
tel 205-824-5200
fax 205-824-5280
Job Number **19-173**

ALABAMA REGISTERED No. 17333 PROFESSIONAL J. STEWART LEE ENGINEER
03/06/2020

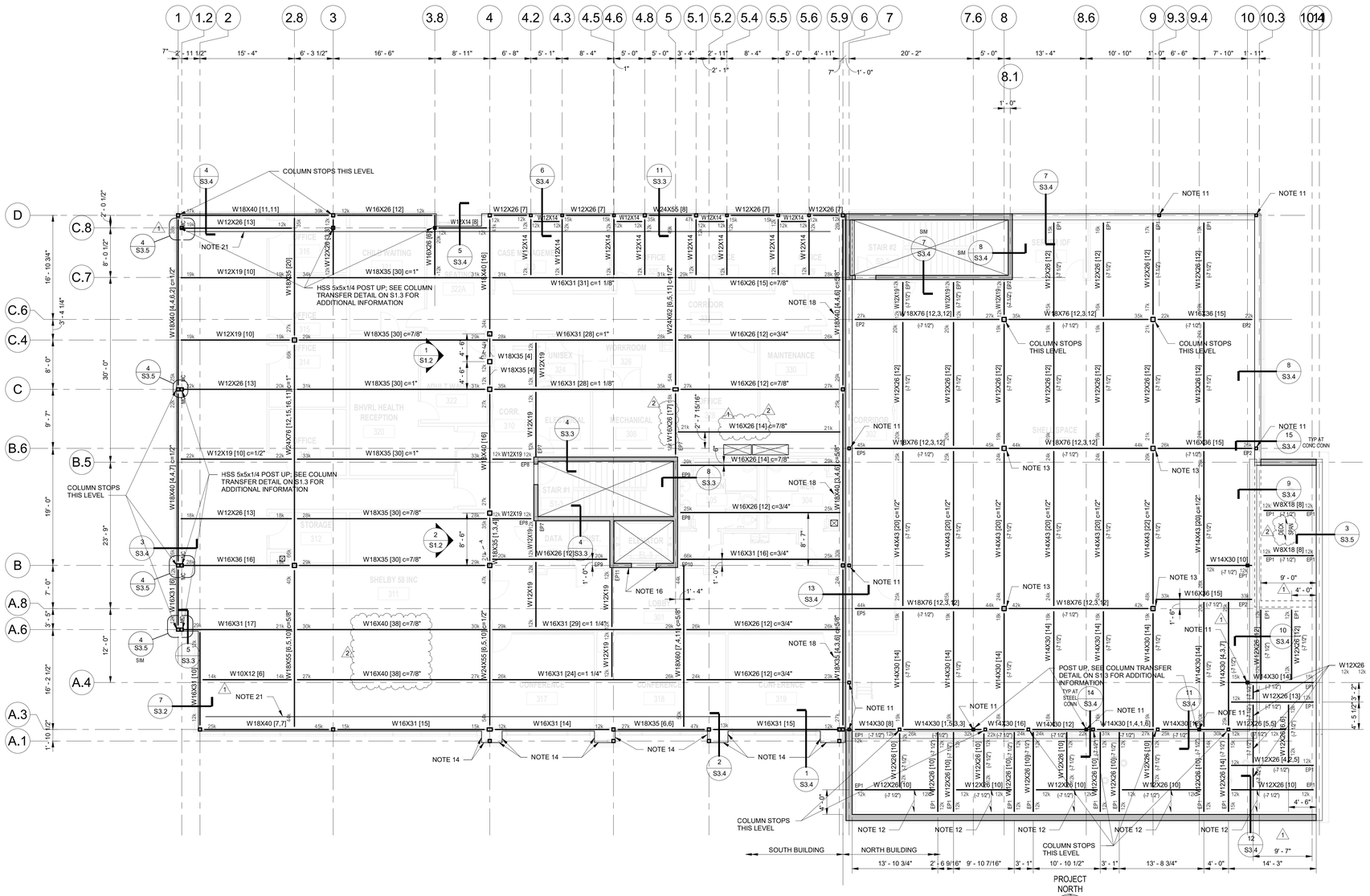

THIRD FLOOR FRAMING PLAN

1/8" = 1'-0"

1. FINISH FLOOR ELEVATION 30'-0", SEE PLAN
2. TOP OF STEEL ELEVATION -0'-7", UNLESS NOTED
3. FLOOR SYSTEM:
   NORTH BUILDING: 4 1/2" NORMAL WEIGHT CONCRETE ON 3", 18 GAGE GALVANIZED COMPOSITE METAL DECK (7 1/2" TOTAL), UNLESS NOTED OTHERWISE, SEE GENERAL NOTES.
   SOUTH BUILDING: 4" NORMAL WEIGHT CONCRETE ON 3", 18 GAGE GALVANIZED COMPOSITE METAL DECK (7" TOTAL), UNLESS NOTED OTHERWISE, SEE GENERAL NOTES.
4. SPACE BEAMS EQUALLY BETWEEN COLUMN CENTERLINES, UNLESS NOTED.
5. [X] INDICATES NUMBER OF 3/4"ø HEADED STUDS SPACED UNIFORMLY ALONG MEMBER WHERE SINGLE VALUE IS GIVEN. SPACE UNIFORMLY ALONG A PART OF MEMBER BETWEEN SUPPORTED BEAMS, OR COLUMN AND BEAM, WHERE MORE THAN ONE VALUE IS GIVEN. SEE GENERAL NOTES.
6. FOR COMPOSITE BEAMS WITHOUT SHEAR STUD DESIGNATION, PROVIDE MINIMUM SPACING PER GENERAL NOTES.
7. BEAM REACTIONS ARE INDICATED AT ENDS OF BEAMS AS 'Xk' WHERE 'X' IS THE MAGNITUDE OF THE SERVICE LEVEL (UNFACTORED) SHEAR REACTION IN KIPS. REACTIONS SHOWN ON PLANS DO NOT INCLUDE VERTICAL COMPONENT OF AXIAL FORCES IN BEAMS.
8. COORDINATE MECHANICAL OPENING SIZE AND LOCATION WITH MECHANICAL DRAWINGS AND UNIT MANUFACTURER.
9. 'MC' INDICATES MOMENT CONNECTION, SEE DETAILS ON S1.3 FOR ADDITIONAL INFORMATION.
10. 'EPx' INDICATES EMBED PLATE, SEE DETAILS ON S1.3 FOR ADDITIONAL INFORMATION.
11. HSS 5x5x1/4 POST UP, SEE SECTION 14/S3.4 FOR CONNECTION TO STEEL BEAM AND 15/S3.4 FOR CONNECTION TO CONCRETE.
12. DECK TO SPAN EW IN BAYS OVER ROLL-UP DOORS.
13. STOP COLUMN THIS LEVEL AND PROVIDE 12x12x1/2 CAP PLATE. PROVIDE HSS 5x5x1/4 POST-UP WITH 3/4x8x8 SLAB EMBED PLATE SIMILAR TO 14/S3.4. SEE 14/S3.4 AND 'COLUMN TO EMBED DETAIL' ON S1.3 FOR ADDITIONAL INFORMATION.
14. L7x4x3/8 LLV; MITER AT CORNERS AND WELD ALL AROUND EACH END TO COLUMN OR BEAM.
15. CONTRACTOR COORDINATE STORM SHUTTER STRUCTURAL SUPPORT REQUIREMENTS WITH STORM SHUTTER MANUFACTURER. CONTRACTOR TO VERIFY IF LOCATION OF BEAMS AS SHOWN IS ADEQUATE FOR STORM SHUTTER INSTALLATION AND OPERATION. NOTIFY DESIGN TEAM OF ANY CONFLICTS.
16. LEAVE OUT CONCRETE WALL FOR ELEVATOR INSTALLATION, SEE ARCHITECTURAL DRAWINGS FOR EXACT REQUIREMENTS AT EACH LEVEL. CONTRACTOR COORDINATE REQUIREMENTS WITH ELEVATOR MANUFACTURER. FOR INFILL, SEE ARCHITECTURAL DRAWINGS.
17. COORDINATE MECHANICAL OPENING SIZE AND LOCATION WITH MECHANICAL DRAWINGS AND UNIT MANUFACTURER. SEE SLAB REINFORCING DETAILS AT OPENINGS ON S1.3.
18. PROVIDE 3/4"Øx4 1/2" LONG HEADED STUD FOR BEAMS ALONG GRID LINE 6. CONTRACTOR COORDINATE DEPTH OF EXPANSION JOINT BLOCKOUT AND VERIFY 1" OF CONCRETE COVER BEYOND HEAD OF STUD IS PROVIDED.
19. NOT USED.
20. PROVIDE CLOSURE PLATE AT EDGE OF SLAB AND EXTEND AS REQUIRED.
21. PROVIDE (2) #4 BARS CONTINUOUS ALONG EDGE OF SLAB WHERE INDICATED.

HWY 280 SHELBY COUNTY SERVICES BUILDING
CONSTRUCTION BID PACKAGE
SHELBY COUNTY DEPARTMENT OF DEVELOPMENT SERVICES
19220 US HWY 280, BIRMINGHAM, AL 35242
19-040.00

ARCHITECT OF RECORD:
WILLIAMS· BLACKSTOCK ARCHITECTS
ARCHITECTURE INTERIORS PLANNING
SUITE 200
2204 FIRST AVENUE SOUTH
BIRMINGHAM, ALABAMA 35233

KEY PLAN:

ISSUE DATE: 03/06/2020

REVISIONS

NO.	DATE	DESCRIPTION
1	3-13-2020	ADDENDUM 1
2	3-20-2020	ADDENDUM 2

PROJECT NUMBER: 19-040.00

DRAWING TITLE: THIRD FLOOR FRAMING PLAN

SHEET NUMBER: S2.3

SDG
STRUCTURAL DESIGN GROUP
300 Chase Park South, Suite 125
Hoover, AL 35244
tel 205-824-5200
fax 205-824-5280
Job Number **19-173**

ALABAMA REGISTERED PROFESSIONAL No. 17333 J. STEWART LEE 03/06/2020

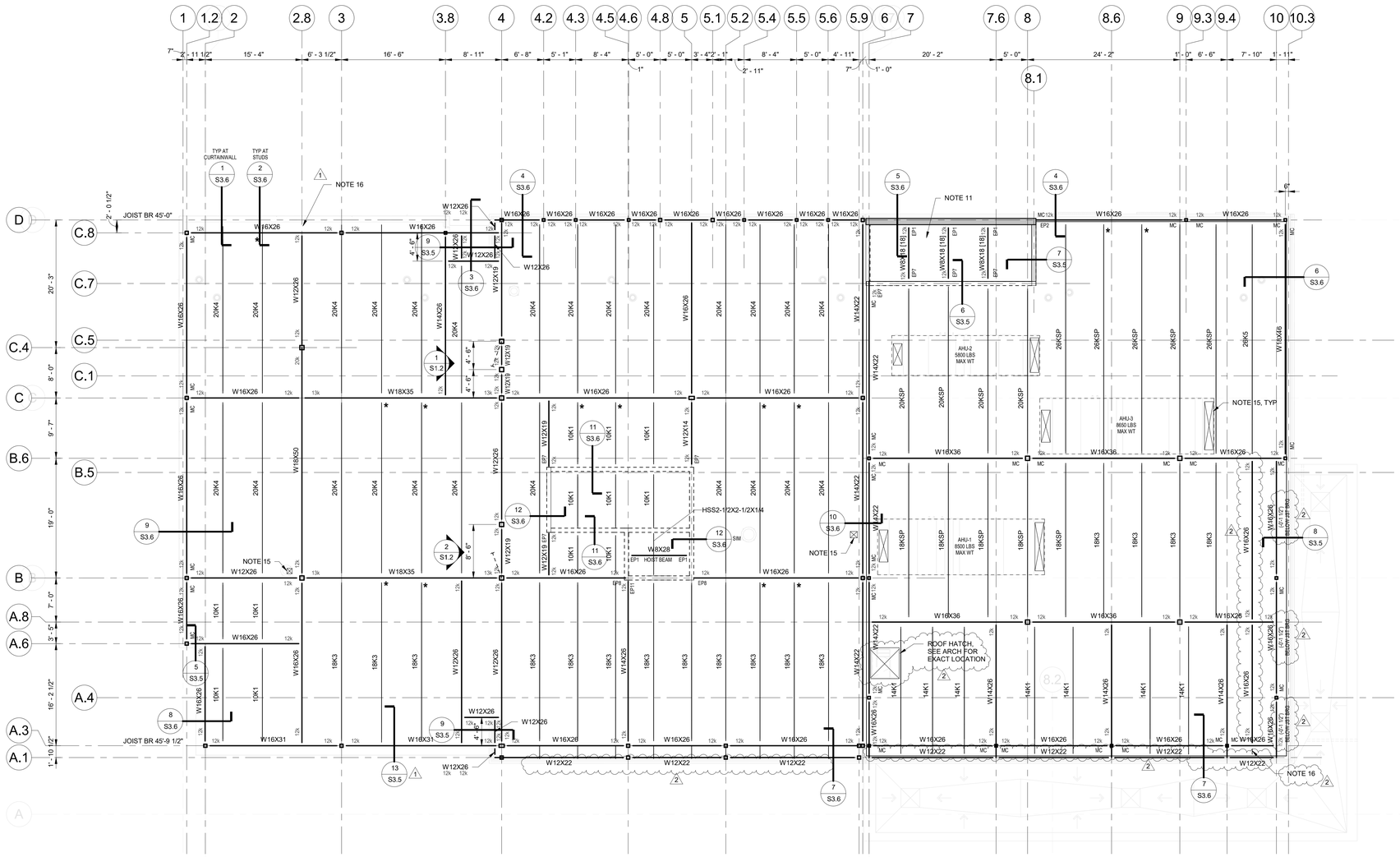

PROJECT NORTH

ROOF FRAMING PLAN

1/8" = 1'-0"

1. TOP OF STEEL (JOIST BEARING) ELEVATION VARIES, SEE PLAN
2. TOP OF STEEL IS EITHER LEVEL OR UNIFORMLY SLOPING BETWEEN NOTED ELEVATIONS.
3. ROOF SYSTEM: 1 1/2" DEEPx20 GAGE GALVANIZED METAL DECK ON STEEL JOIST.
4. BEAMS PARALLEL TO JOISTS ARE 2 1/2" HIGHER THAN SUPPORTING MEMBERS, UNLESS NOTED OTHERWISE.
5. SPACE STEEL JOISTS EQUALLY BETWEEN BEAMS OR COLUMN CENTERLINES, UNLESS NOTED.
6. EQUIPMENT LOCATIONS SHOWN ARE APPROXIMATE. THE GENERAL CONTRACTOR SHALL COORDINATE AND VERIFY THE SIZE, WEIGHT, AND LOCATION OF ALL MECHANICAL UNITS WITH THE JOIST MANUFACTURER. DO NOT SCALE FROM THIS DRAWING.
7. BEAM REACTIONS ARE INDICATED AT ENDS OF BEAMS AS 'XK' WHERE 'X' IS THE MAGNITUDE OF THE SERVICE LEVEL (UNFACTORED) SHEAR REACTION IN KIPS. REACTIONS SHOWN ON PLANS DO NOT INCLUDE VERTICAL COMPONENT OF AXIAL FORCES IN BEAMS.
8. HANGER LOCATIONS FROM PIPING LARGER THAN 3 INCHES IN DIAMETER MUST BE COORDINATED BY GENERAL CONTRACTOR WITH JOIST MANUFACTURER. FOR PIPING WEIGHTS, SEE TABLE ON S.X.X.
9. 'MC' INDICATES MOMENT CONNECTION, SEE DETAILS ON S1.3 FOR ADDITIONAL INFORMATION.
10. 'EPx' INDICATES EMBED PLATE, SEE DETAILS ON S1.3 FOR ADDITIONAL INFORMATION.
11. FLOOR SYSTEM IN THIS AREA IS 4 1/2" NORMAL WEIGHT CONCRETE ON 3"x18 GAGE GALVANIZED COMPOSITE DECK (7 1/2" TOTAL), SEE GENERAL NOTES FOR DECK DETAILS.
12. AT JOISTS DESIGNATED 'KSP', JOIST MANUFACTURER SHALL DESIGN JOIST FOR 20 PSF DL AND 20 PSF LL THE PLUS ANY ADDITIONAL LOADS INDICATED IN PLAN OR SECTIONS. LIMIT TOTAL DEFLECTION OF JOIST TO L/360.
13. ★ DENOTES EXTEND AND WELD JOIST BOTTOM CHORD TO 1/4" PLATE WELDED TO BEAM FLANGE.
14. PROVIDE ROOF EQUIPMENT FRAME AT ALL ROOF DRAINS AND ROOF HATCHES. SEE TYPICAL DETAIL ON S1.4.
15. CONTRACTOR COORDINATE ALL ROOF OPENINGS FROM MEP WITH JOIST AND DECK MANUFACTURER AND STEEL FABRICATOR. AT ALL OPENINGS PROVIDE ROOF EQUIPMENT FRAME DETAIL AS INDICATED IN TYPICAL DETAILS.
16. EXTEND HSS 2 1/2x 2 1/2x 1/4 SIM TO TOP CHORD EXTENSION. WELD ALL AROUND TO W16 SUPPORT BEAM.

HWY 280 SHELBY COUNTY SERVICES BUILDING
CONSTRUCTION BID PACKAGE
SHELBY COUNTY DEPARTMENT OF DEVELOPMENT SERVICES
19220 US HWY 280, BIRMINGHAM, AL 35242
19-040.00

ARCHITECT OF RECORD :
WILLIAMS· BLACKSTOCK
ARCHITECTS
ARCHITECTURE INTERIORS PLANNING
SUITE 200
2204 FIRST AVENUE SOUTH
BIRMINGHAM, ALABAMA 35233

KEY PLAN :

ISSUE DATE:
03/06/2020

REVISIONS

NO.	DATE	DESCRIPTION
1	3-13-2020	ADDENDUM 1
2	3-20-2020	ADDENDUM 2

PROJECT NUMBER:
19-040.00

DRAWING TITLE:
ROOF FRAMING PLAN

SHEET NUMBER:
S2.4

SDG
STRUCTURAL DESIGN GROUP
300 Chase Park South, Suite 125
Hoover, AL 35244
tel 205-824-5200
fax 205-824-5280
Job Number **19-173**

ALABAMA REGISTERED PROFESSIONAL No. 17333 J. STEWART GEE 03/06/2020

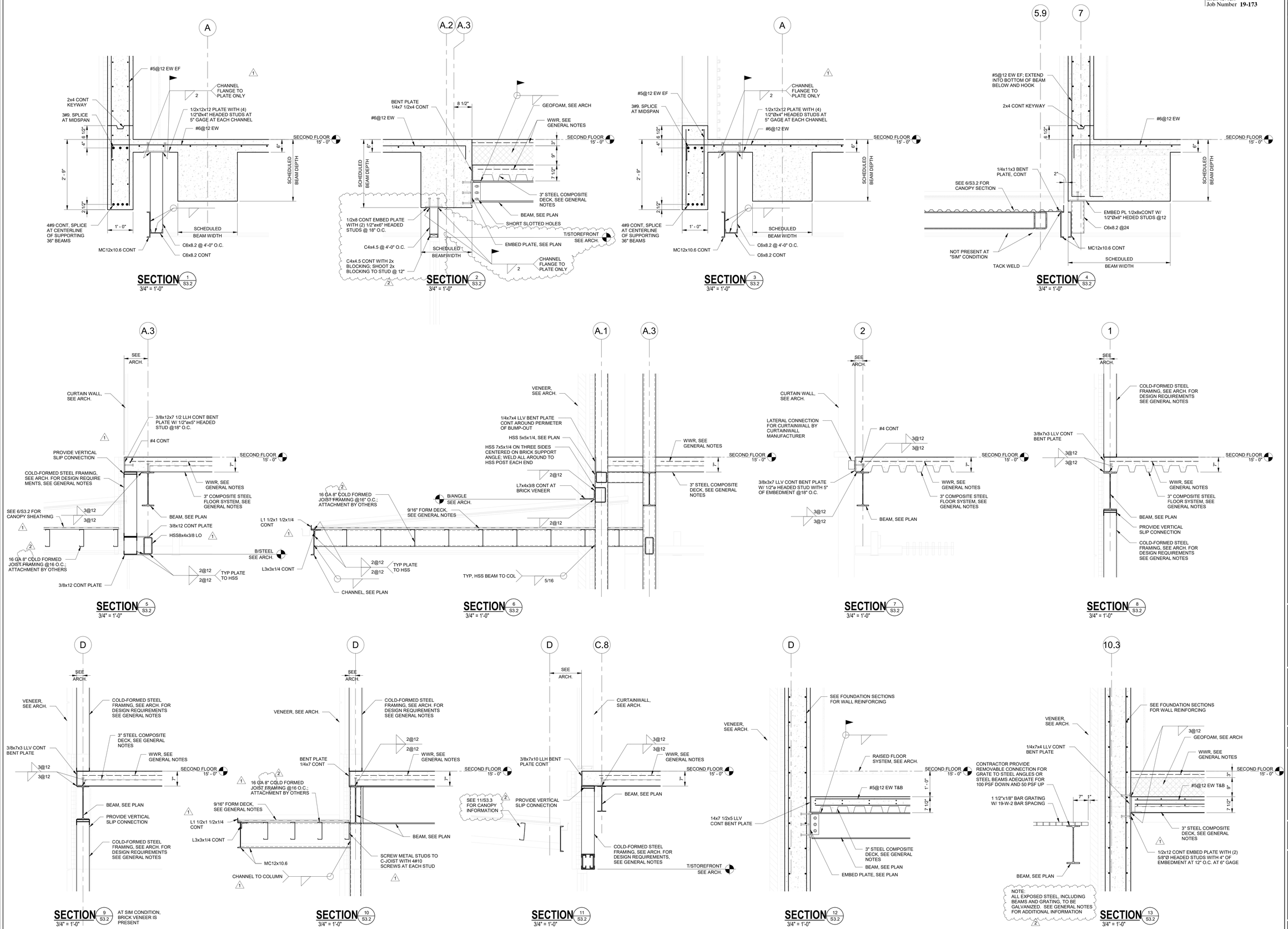

HWY 280 SHELBY COUNTY SERVICES BUILDING
CONSTRUCTION BID PACKAGE
SHELBY COUNTY DEPARTMENT OF DEVELOPMENT SERVICES
19220 US HWY 280, BIRMINGHAM, AL 35242
19-040.00

ARCHITECT OF RECORD:
WILLIAMS· BLACKSTOCK ARCHITECTS
ARCHITECTURE INTERIORS PLANNING
SUITE 200
2204 FIRST AVENUE SOUTH
BIRMINGHAM, ALABAMA 35233

KEY PLAN:

ISSUE DATE: 03/06/2020

REVISIONS

NO.	DATE	DESCRIPTION
1	3-13-2020	ADDENDUM 1
2	3-20-2020	ADDENDUM 2

PROJECT NUMBER: 19-040.00

DRAWING TITLE: SECTIONS

SHEET NUMBER: S3.2

SDG
STRUCTURAL DESIGN GROUP
300 Chase Park South, Suite 125
Hoover, AL 35244
tel 205-824-5200
fax 205-824-5280
Job Number **19-173**

ALABAMA REGISTERED No. 17333 PROFESSIONAL J. STEWART GEE ENGINEER
03/06/2020

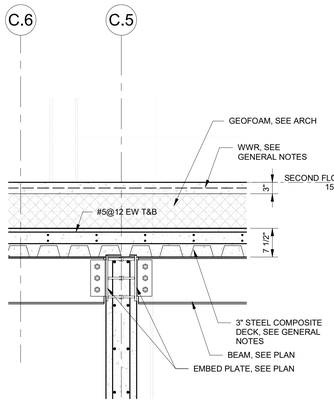

SECTION 1 S3.3
3/4" = 1'-0"

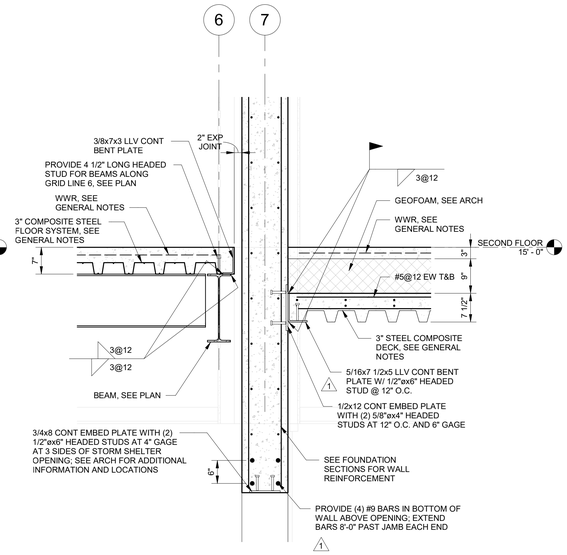

SECTION 2 S3.3
3/4" = 1'-0"

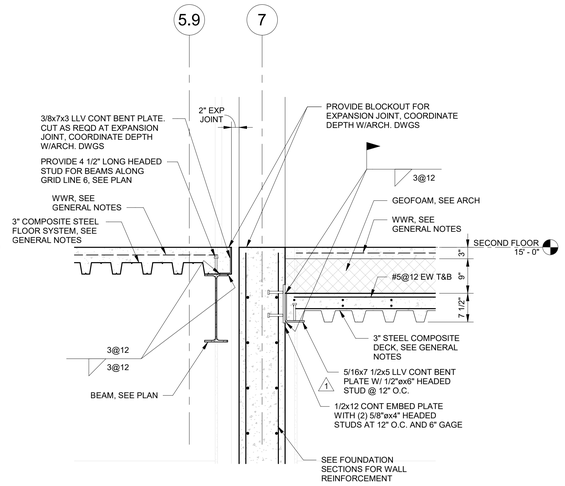

SECTION 3 S3.3
3/4" = 1'-0"

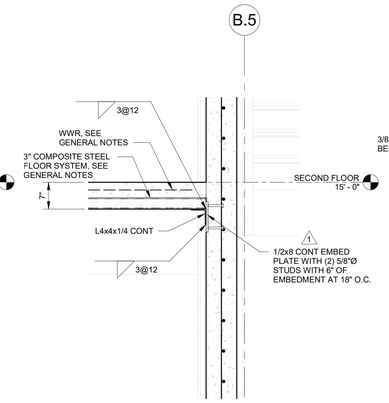

SECTION 4 S3.3
3/4" = 1'-0"

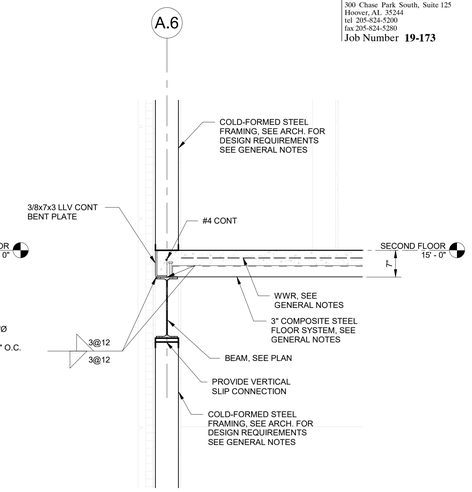

SECTION 5 S3.3
3/4" = 1'-0"

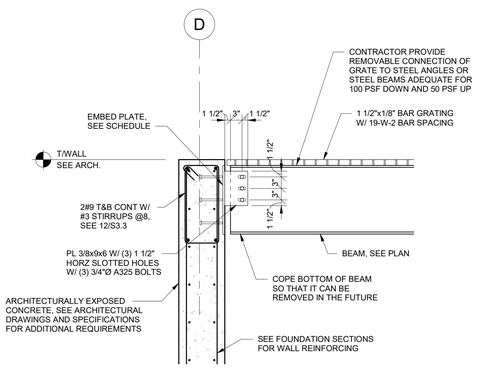

SECTION 6 S3.3
3/4" = 1'-0"

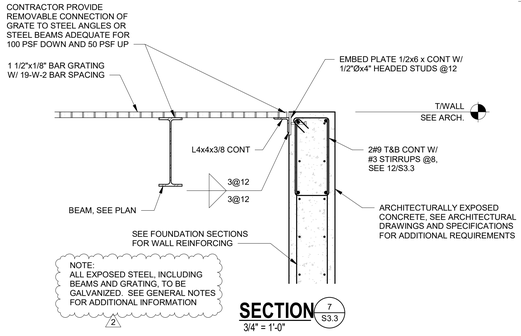

SECTION 7 S3.3
3/4" = 1'-0"

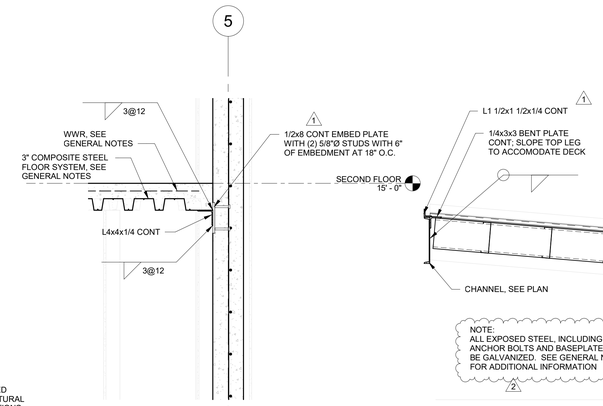

SECTION 8 S3.3
3/4" = 1'-0"

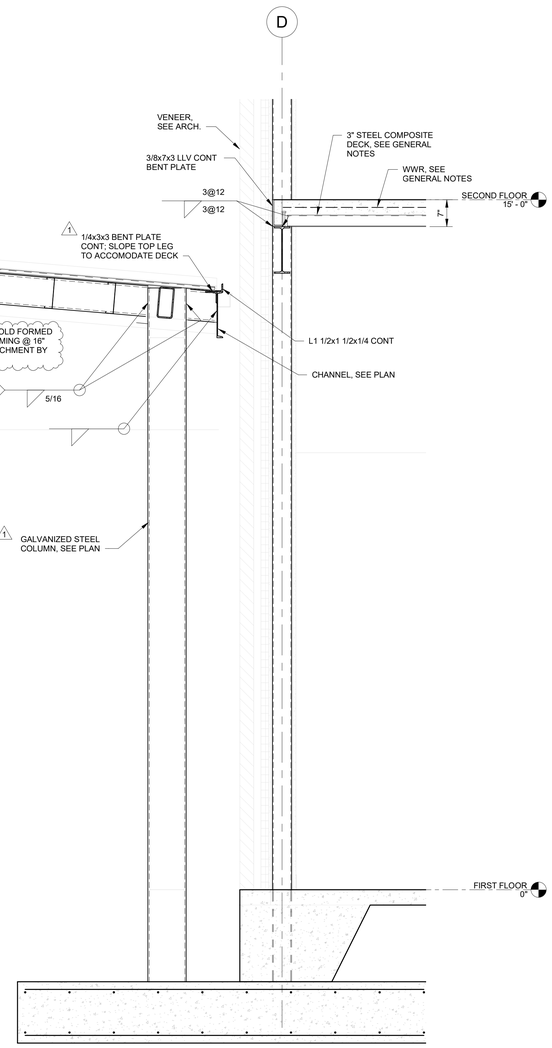

SECTION 13 S3.3
3/4" = 1'-0"

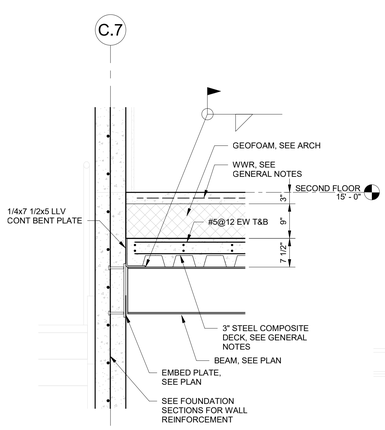

SECTION 9 S3.3
3/4" = 1'-0"

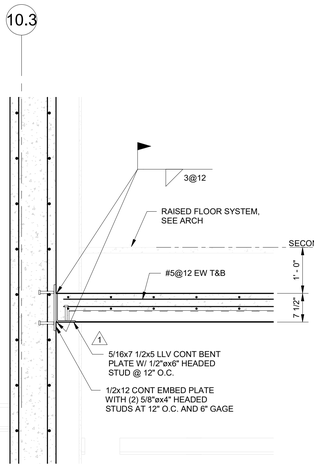

SECTION 10 S3.3
3/4" = 1'-0"

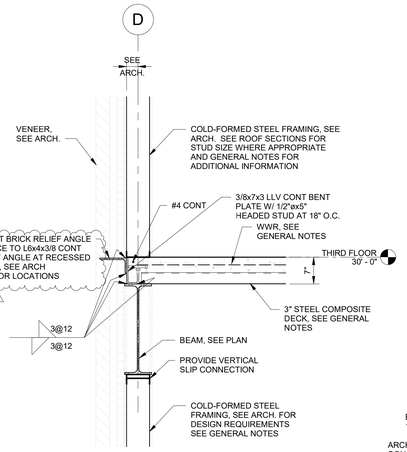

SECTION 11 S3.3
3/4" = 1'-0"

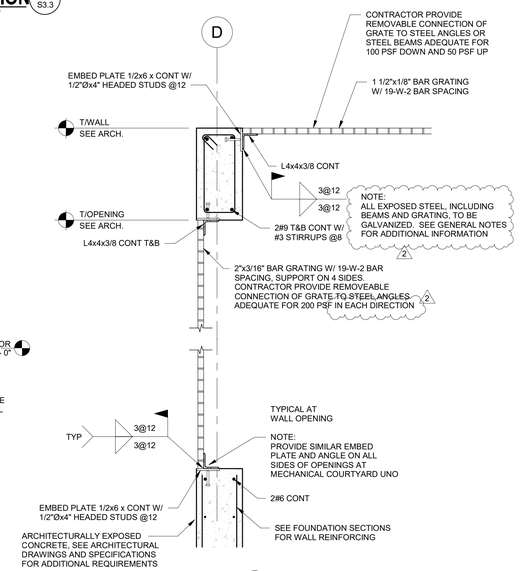

SECTION 12 S3.3
3/4" = 1'-0"

HWY 280 SHELBY COUNTY SERVICES BUILDING
CONSTRUCTION BID PACKAGE
SHELBY COUNTY DEPARTMENT OF DEVELOPMENT SERVICES
19220 US HWY 280, BIRMINGHAM, AL 35242
19-040.00

ARCHITECT OF RECORD:
WILLIAMS· BLACKSTOCK ARCHITECTS
ARCHITECTURE INTERIORS PLANNING
SUITE 200
2204 FIRST AVENUE SOUTH
BIRMINGHAM, ALABAMA 35233

KEY PLAN:

ISSUE DATE:
03/06/2020

REVISIONS

NO.	DATE	DESCRIPTION
1	3-13-2020	ADDENDUM 1
2	3-20-2020	ADDENDUM 2

PROJECT NUMBER:
19-040.00

DRAWING TITLE:
SECTIONS

SHEET NUMBER:
S3.3

SDG
STRUCTURAL DESIGN GROUP
300 Chase Park South, Suite 125
Hoover, AL 35244
tel 205-824-5200
fax 205-824-5280
Job Number **19-173**

ALABAMA REGISTERED PROFESSIONAL ENGINEER No. 17333 J. STEWART LEE
03/06/2020

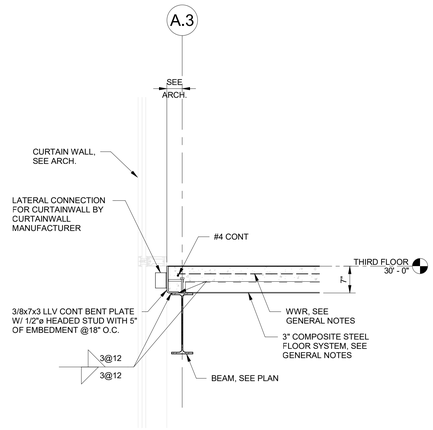

SECTION 1/S3.4
3/4" = 1'-0"

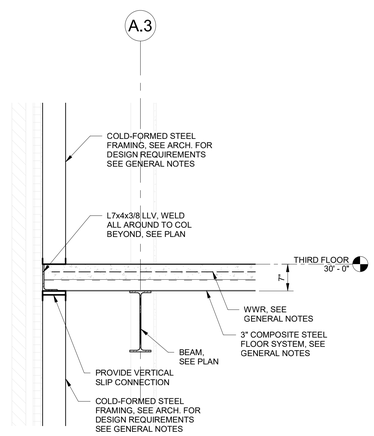

SECTION 2/S3.4
3/4" = 1'-0"

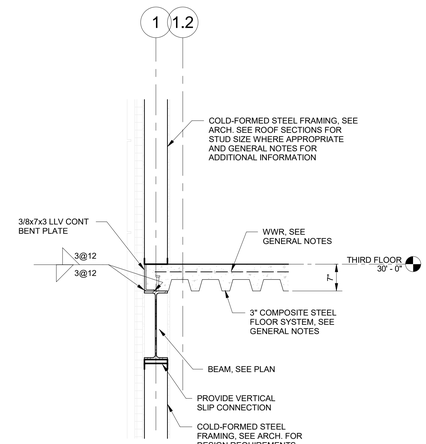

SECTION 3/S3.4
3/4" = 1'-0"

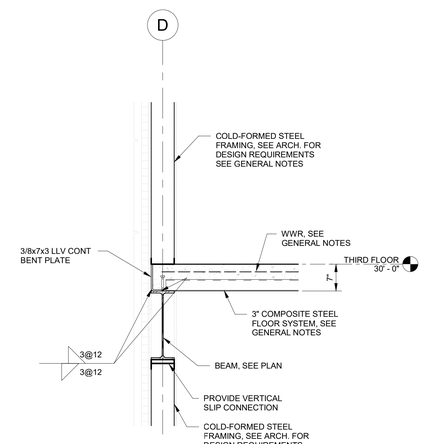

SECTION 4/S3.4
3/4" = 1'-0"

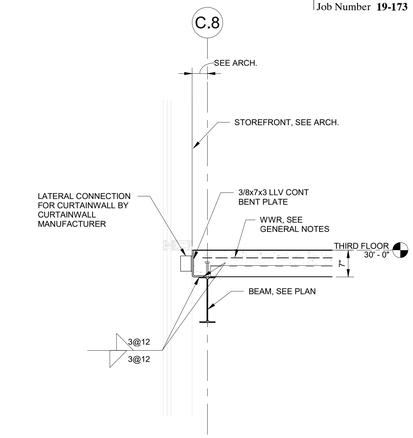

SECTION 5/S3.4
3/4" = 1'-0"

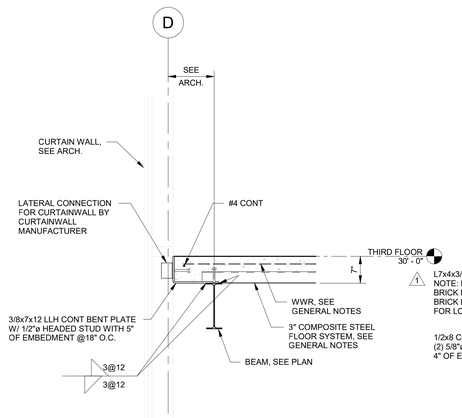

SECTION 6/S3.4
3/4" = 1'-0"

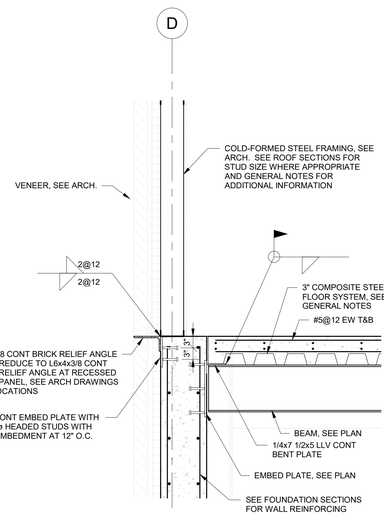

SECTION 7/S3.4
3/4" = 1'-0"

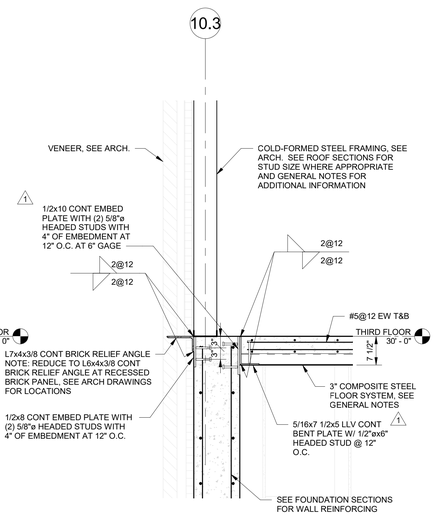

SECTION 8/S3.4
3/4" = 1'-0"

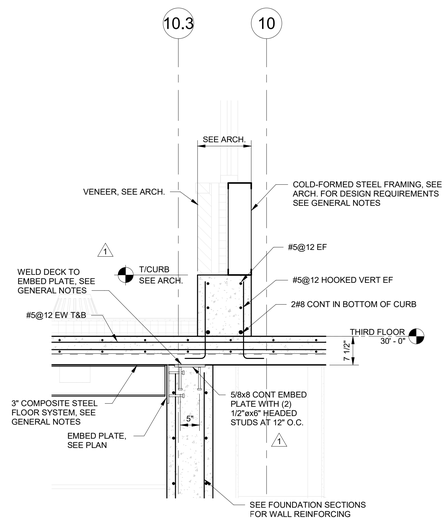

SECTION 9/S3.4
3/4" = 1'-0"

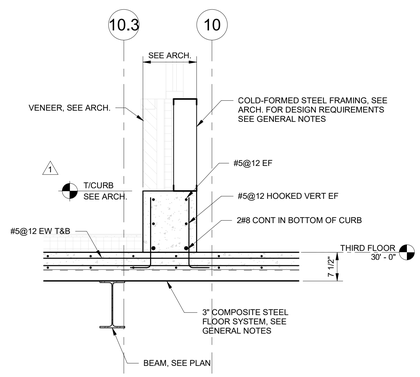

SECTION 10/S3.4
3/4" = 1'-0"

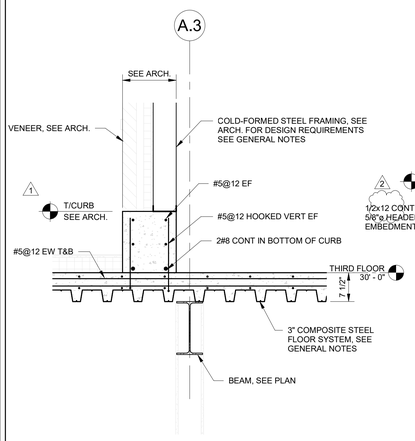

SECTION 11/S3.4
3/4" = 1'-0"

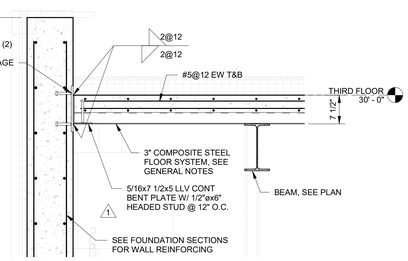

SECTION 12/S3.4
3/4" = 1'-0"

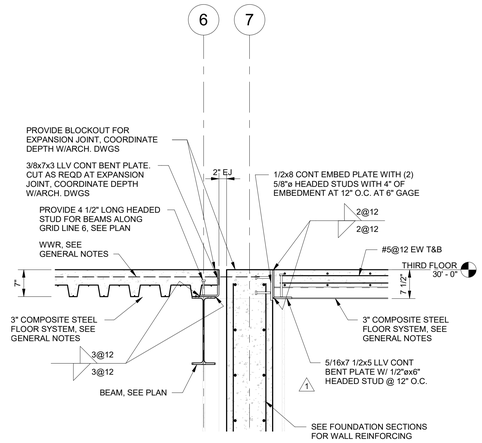

SECTION 13/S3.4
3/4" = 1'-0"

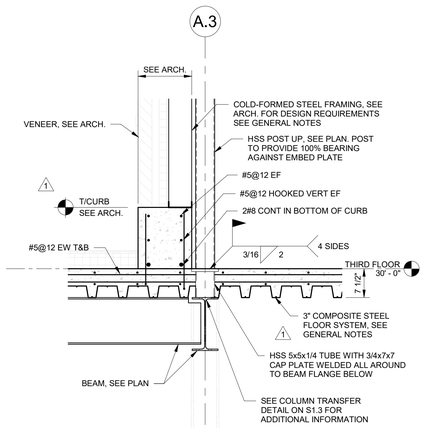

SECTION 14/S3.4
3/4" = 1'-0"

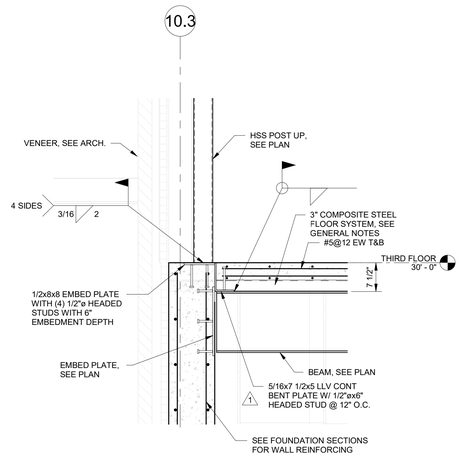

SECTION 15/S3.4
3/4" = 1'-0"

HWY 280 SHELBY COUNTY SERVICES BUILDING
CONSTRUCTION BID PACKAGE
SHELBY COUNTY DEPARTMENT OF DEVELOPMENT SERVICES
19220 US HWY 280, BIRMINGHAM, AL 35242
19-040.00

ARCHITECT OF RECORD:
WILLIAMS· BLACKSTOCK
ARCHITECTS
ARCHITECTURE INTERIORS PLANNING
SUITE 200
2204 FIRST AVENUE SOUTH
BIRMINGHAM, ALABAMA 35233

KEY PLAN:

ISSUE DATE:
03/06/2020

REVISIONS

NO.	DATE	DESCRIPTION
1	3-13-2020	ADDENDUM 1
2	3-20-2020	ADDENDUM 2

PROJECT NUMBER:
19-040.00

DRAWING TITLE:
SECTIONS

SHEET NUMBER:
S3.4

SDG
STRUCTURAL DESIGN GROUP
300 Chase Park South, Suite 125
Hoover, AL 35244
tel 205-824-5200
fax 205-824-5280
Job Number **19-173**

ALABAMA REGISTERED No. 17333 PROFESSIONAL J. STEWART GEE ENGINEER
03/06/2020

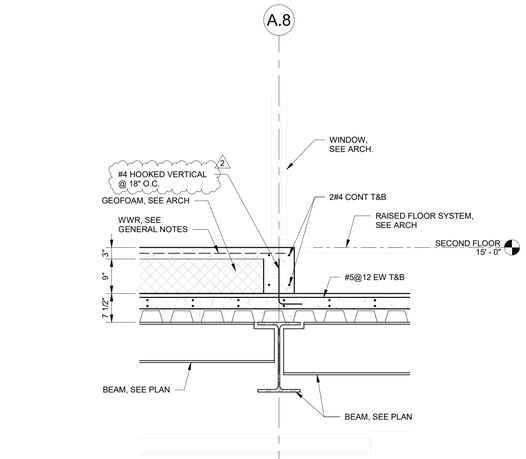

SECTION 1/S3.5
3/4" = 1'-0"

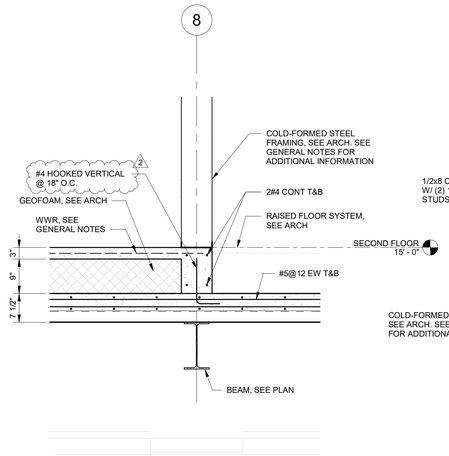

SECTION 2/S3.5
3/4" = 1'-0"

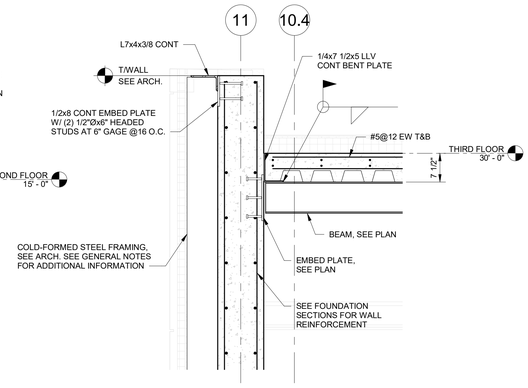

SECTION 3/S3.5
3/4" = 1'-0"

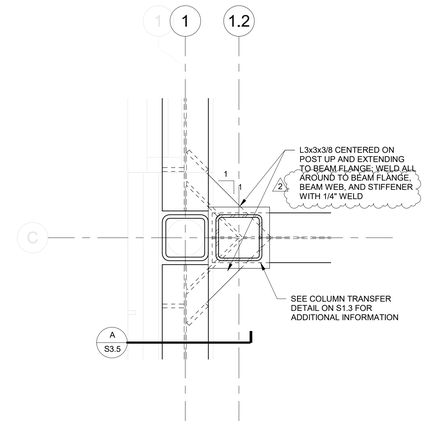

DETAIL 4/S3.5
1 1/2" = 1'-0"

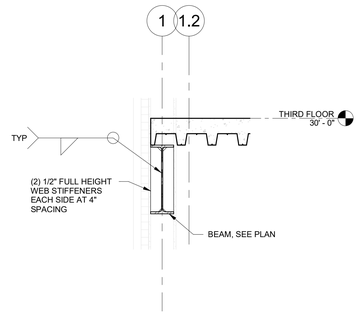

SECTION A S3.5
3/4" = 1'-0"

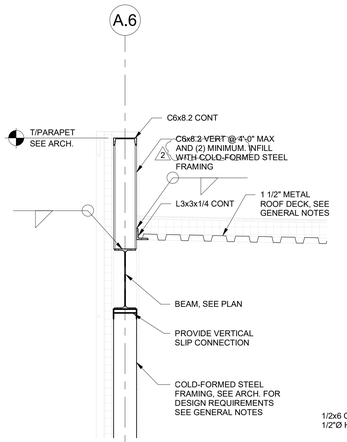

SECTION 5/S3.5
3/4" = 1'-0"

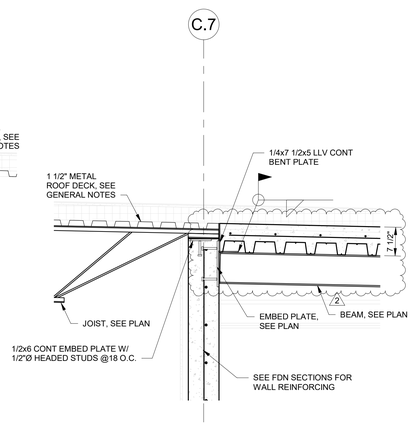

SECTION 6/S3.5
3/4" = 1'-0"

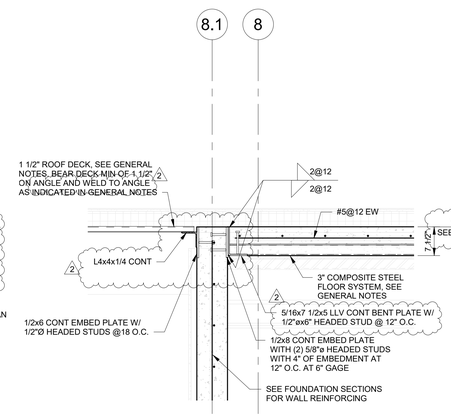

SECTION 7/S3.5
3/4" = 1'-0"

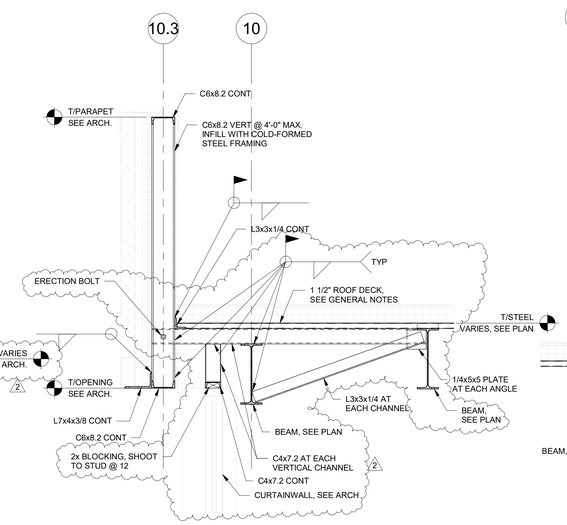

SECTION 8/S3.5
3/4" = 1'-0"

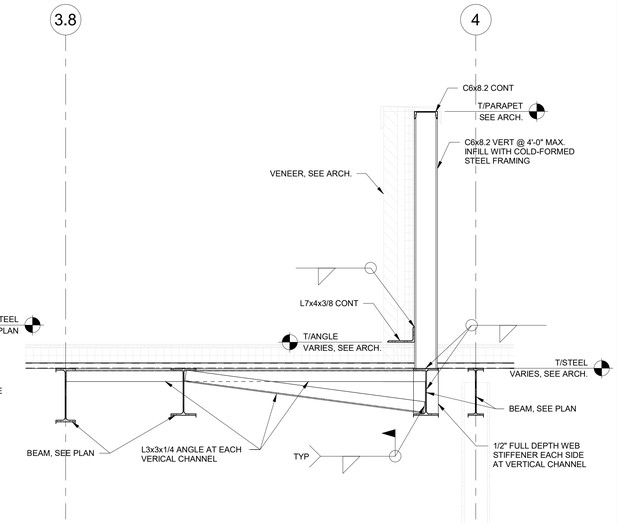

SECTION 9/S3.5
3/4" = 1'-0"

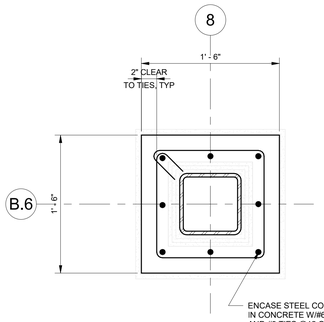

SECTION 10/S3.5
1 1/2" = 1'-0"

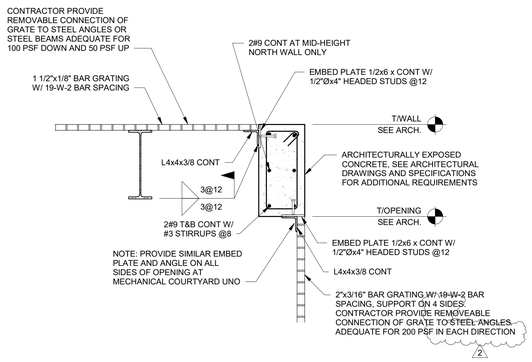

SECTION 11/S3.5
3/4" = 1'-0"

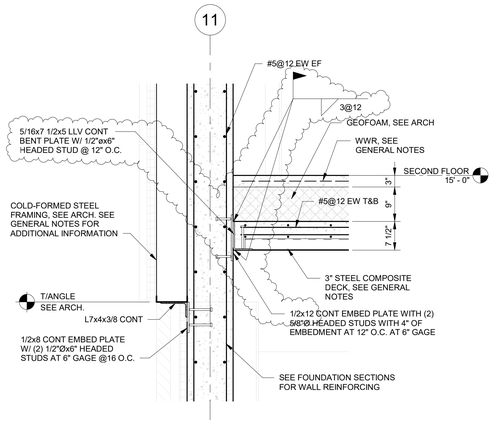

SECTION 12/S3.5
3/4" = 1'-0"

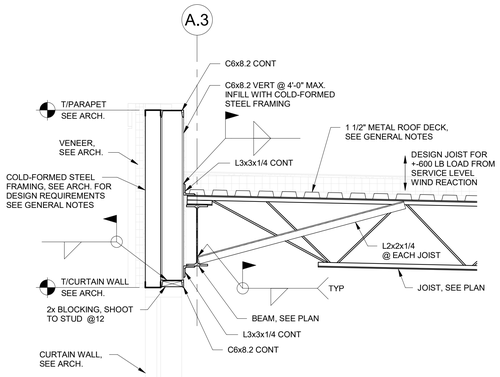

SECTION 13/S3.5
3/4" = 1'-0"

HWY 280 SHELBY COUNTY SERVICES BUILDING
CONSTRUCTION BID PACKAGE
SHELBY COUNTY DEPARTMENT OF DEVELOPMENT SERVICES
19220 US HWY 280, BIRMINGHAM, AL 35242
19-040.00

ARCHITECT OF RECORD :
WILLIAMS· BLACKSTOCK
ARCHITECTS
ARCHITECTURE INTERIORS PLANNING
SUITE 200
2204 FIRST AVENUE SOUTH
BIRMINGHAM, ALABAMA 35233

KEY PLAN :

ISSUE DATE:
03/06/2020

REVISIONS

NO.	DATE	DESCRIPTION
1	3-13-2020	ADDENDUM 1
2	3-20-2020	ADDENDUM 2

PROJECT NUMBER:
19-040.00

DRAWING TITLE:
SECTIONS

SHEET NUMBER:
S3.5

SDG
STRUCTURAL DESIGN GROUP
300 Chase Park South, Suite 125
Hoover, AL 35244
tel 205-824-5200
fax 205-824-5280
Job Number **19-173**

ALABAMA REGISTERED No. 17333 PROFESSIONAL J. STEWART LEE ENGINEER
03/06/2020

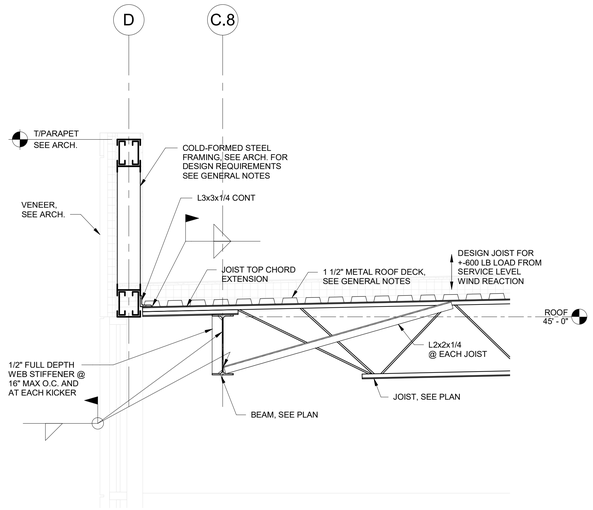

SECTION 1/S3.6
3/4" = 1'-0"

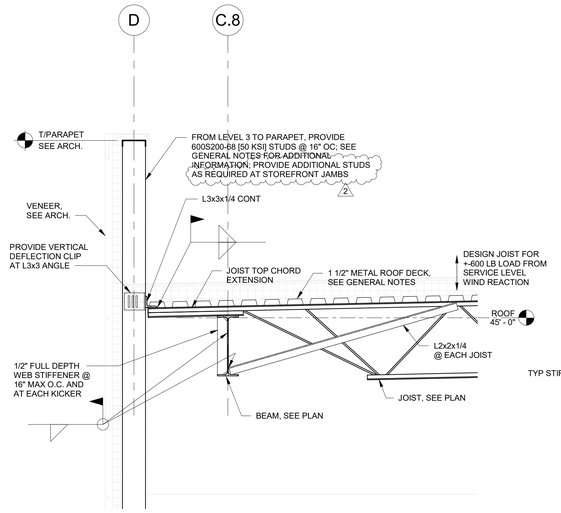

SECTION 2/S3.6
3/4" = 1'-0"

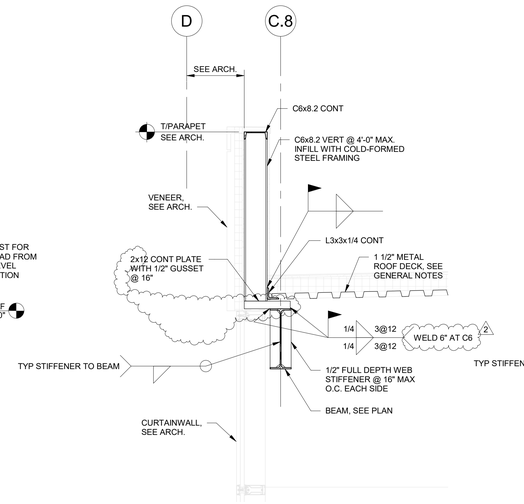

SECTION 3/S3.6
3/4" = 1'-0"

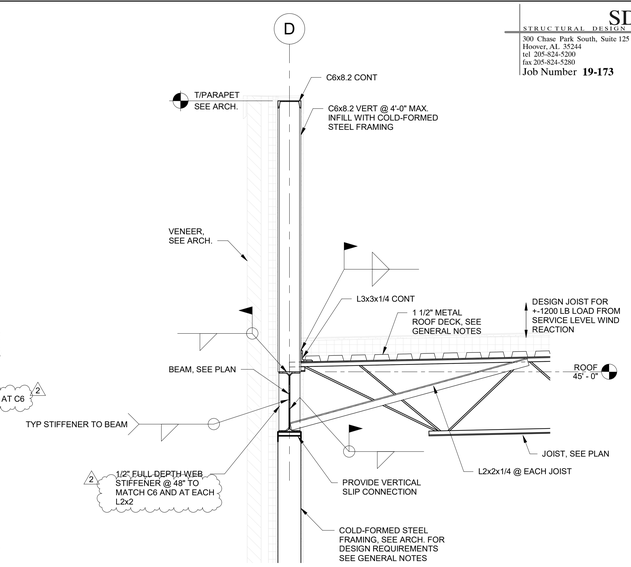

SECTION 4/S3.6
3/4" = 1'-0"

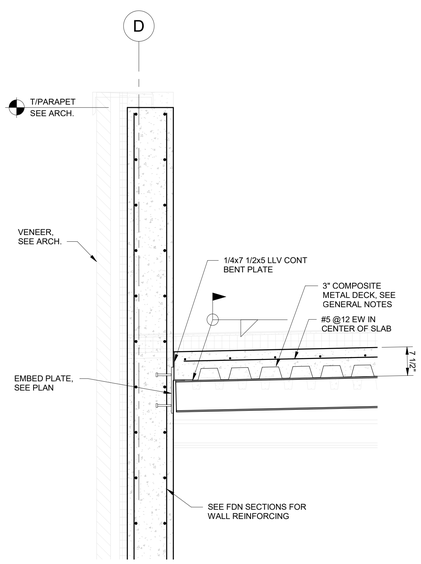

SECTION 5/S3.6
3/4" = 1'-0"

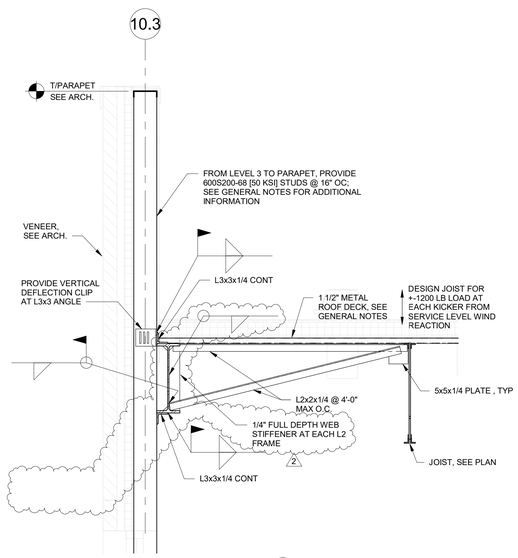

SECTION 6/S3.6
3/4" = 1'-0"

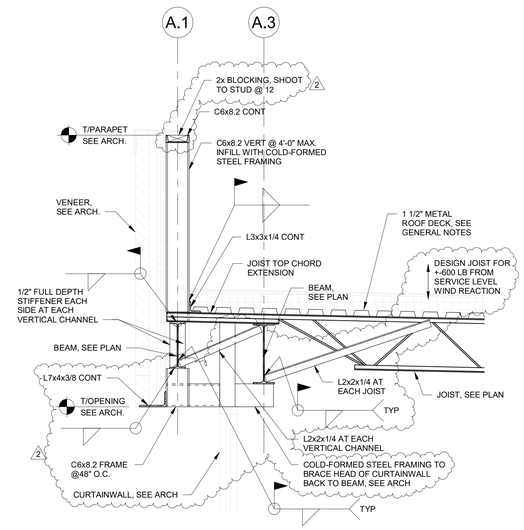

SECTION 7/S3.6
3/4" = 1'-0"

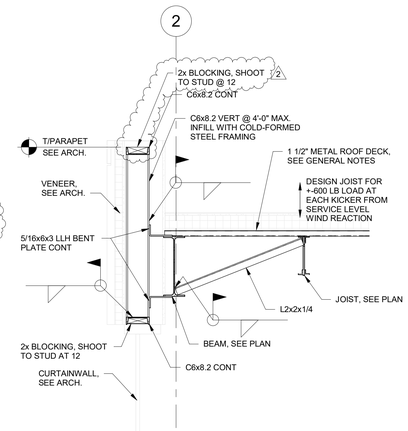

SECTION 8/S3.6
3/4" = 1'-0"

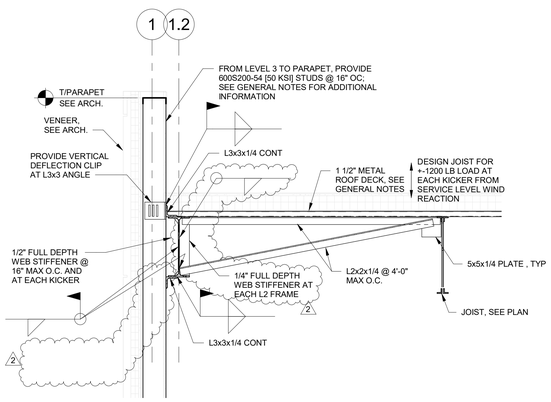

SECTION 9/S3.6
3/4" = 1'-0"

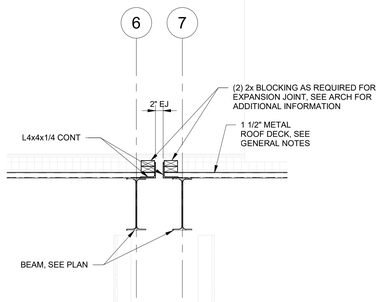

SECTION 10/S3.6
3/4" = 1'-0"

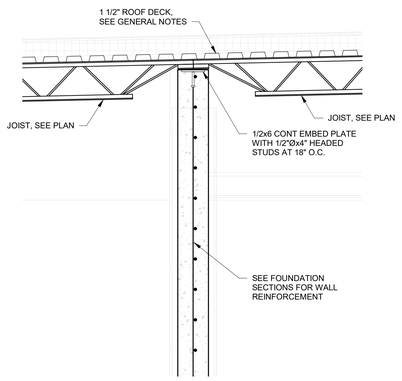

SECTION 11/S3.6
3/4" = 1'-0"

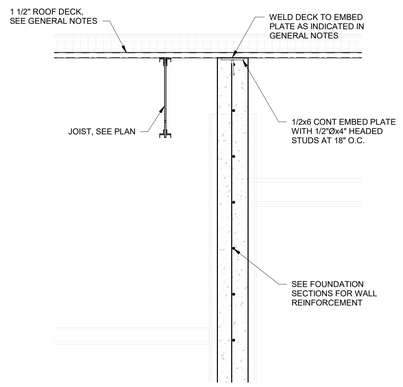

SECTION 12/S3.6
3/4" = 1'-0"

HWY 280 SHELBY COUNTY SERVICES BUILDING
CONSTRUCTION BID PACKAGE
SHELBY COUNTY DEPARTMENT OF DEVELOPMENT SERVICES
19220 US HWY 280, BIRMINGHAM, AL 35242
19-040.00

ARCHITECT OF RECORD :
WILLIAMS· BLACKSTOCK
ARCHITECTS
ARCHITECTURE INTERIORS PLANNING
SUITE 200
2204 FIRST AVENUE SOUTH
BIRMINGHAM, ALABAMA 35233

KEY PLAN :

ISSUE DATE:
03/06/2020

REVISIONS

NO.	DATE	DESCRIPTION
2	3-20-2020	ADDENDUM 2

PROJECT NUMBER:
19-040.00

DRAWING TITLE:
SECTIONS

SHEET NUMBER:
S3.6

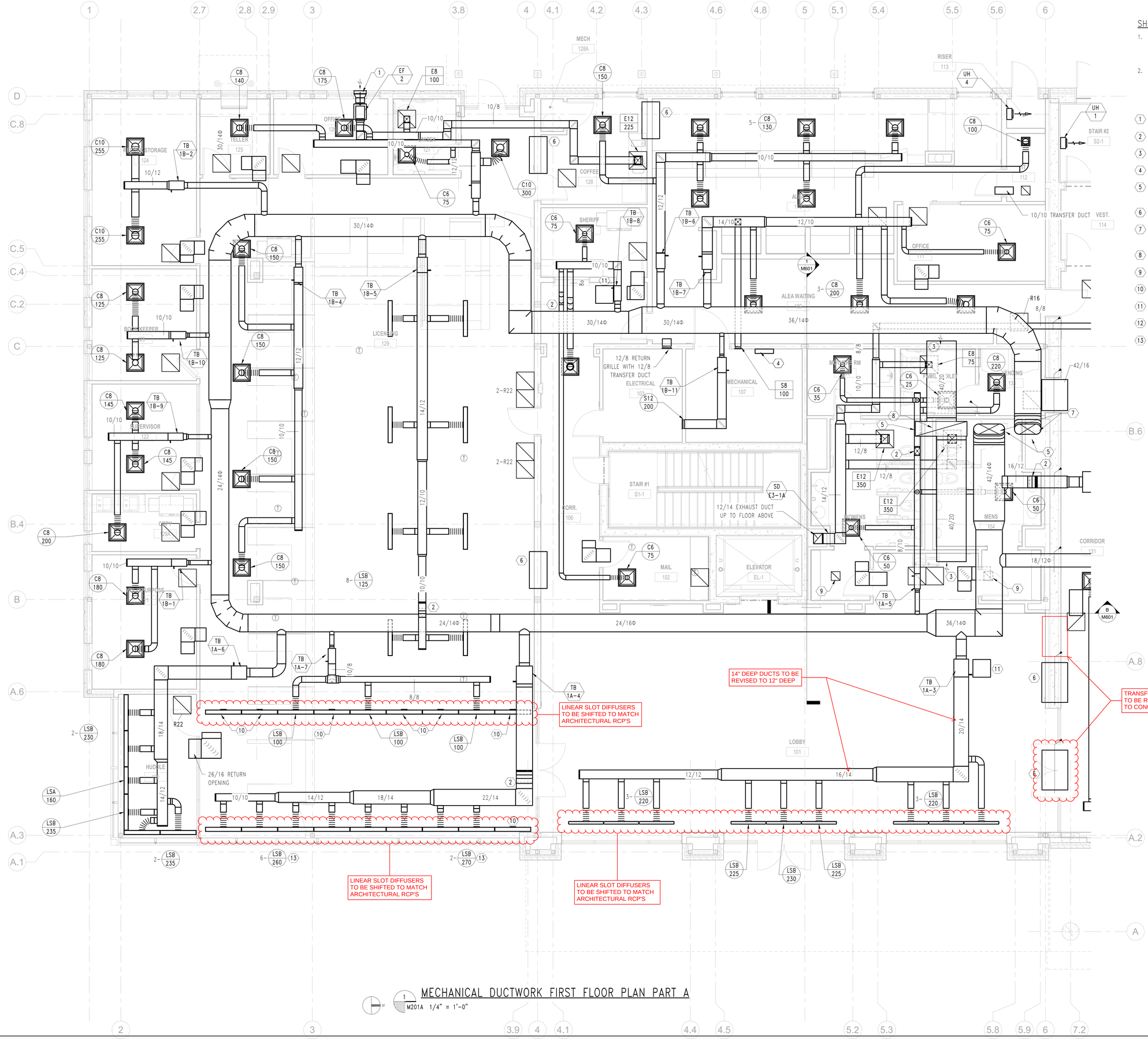

SHEET NOTES:

1. USE R16 FOR CEILING RETURN GRILLES, UNLESS OTHERWISE INDICATED ON PLANS. SEE DETAIL H/M006
2. USE 18/10 TRANSFER DUCT FOR PLENUM RETURN, UNLESS OTHERWISE INDICATE ON PLANS. SEE DETAIL G/M006 (A)

KEYED NOTES:

1. 16x12 EXHAUST LOUVER.
2. DUCT OFFSET UP OR DOWN.
3. 40/20 RETURN OPENING WITH HARDWARE CLOTH.
4. CONTROL PANEL FOR FIRST FLOOR.
5. FIRE DAMPERS AT FLOOR ABOVE. PENETRATION (SECOND FLOOR), ACCESS FROM MECH. ROOM ABOVE
6. 54/16 TRANSFER DUCT.
7. 36/14 AND 42/14 OVAL SUPPLY DUCT UP TO AHU-1 ON ROOF.
8. 70/20 RETURN DUCT UP TO AHU-1 ON ROOF.
9. 12X12 RETURN GRILL WITH 10X10 OPENING.
10. PROVIDE BLANK-OFF FOR CONTINUOUS, SLOT DIFFUSER.
11. CEILING ACCESS PANEL. SEE ARCH.
12. CONTROL PANEL FOR FIRST FLOOR.
13. PATTERN ADJUSTED FOR OUTER SLOT 45 DEG. TOWARDS WINDOW AND INNER SLOT HORIZONTAL.

KEY PLAN

SCALE: 1/4" = 1'-0"

MECHANICAL DUCTWORK FIRST FLOOR PLAN PART A

1 M201A 1/4" = 1'-0"

HHB Engineers, P.C.
CONSULTING ENGINEERS
PRATTVILLE, AL 334/358-2707

ALABAMA LICENSED NO. 13702 PROFESSIONAL ENGINEER THOMAS L. HATTEMER 3/4/19 Shelby Co.

HWY 280 SHELBY COUNTY SERVICES BUILDING
CONSTRUCTION BID PACKAGE

SHELBY COUNTY DEPARTMENT OF DEVELOPMENT SERVICES
19220 US HWY 280, BIRMINGHAM, AL 35242
19-040.00

ARCHITECT OF RECORD:
WILLIAMS· BLACKSTOCK
ARCHITECTS
ARCHITECTURE INTERIORS PLANNING
SUITE 200
2204 FIRST AVENUE SOUTH
BIRMINGHAM, ALABAMA 35233

KEY PLAN:

ISSUE DATE: 03/06/2020

REVISIONS

NO.	DATE	DESCRIPTION

PROJECT NUMBER: 19-040.00

DRAWING TITLE: MECHANICAL DUCTWORK FIRST FLOOR PLAN - PART A

SHEET NUMBER: M201A

3/5/2020 12:02:01 PM

N:\2019jobs\219067\Drawings\MECH\SHELBY COUNTY SERVICES BUILDING

REVIT 2019

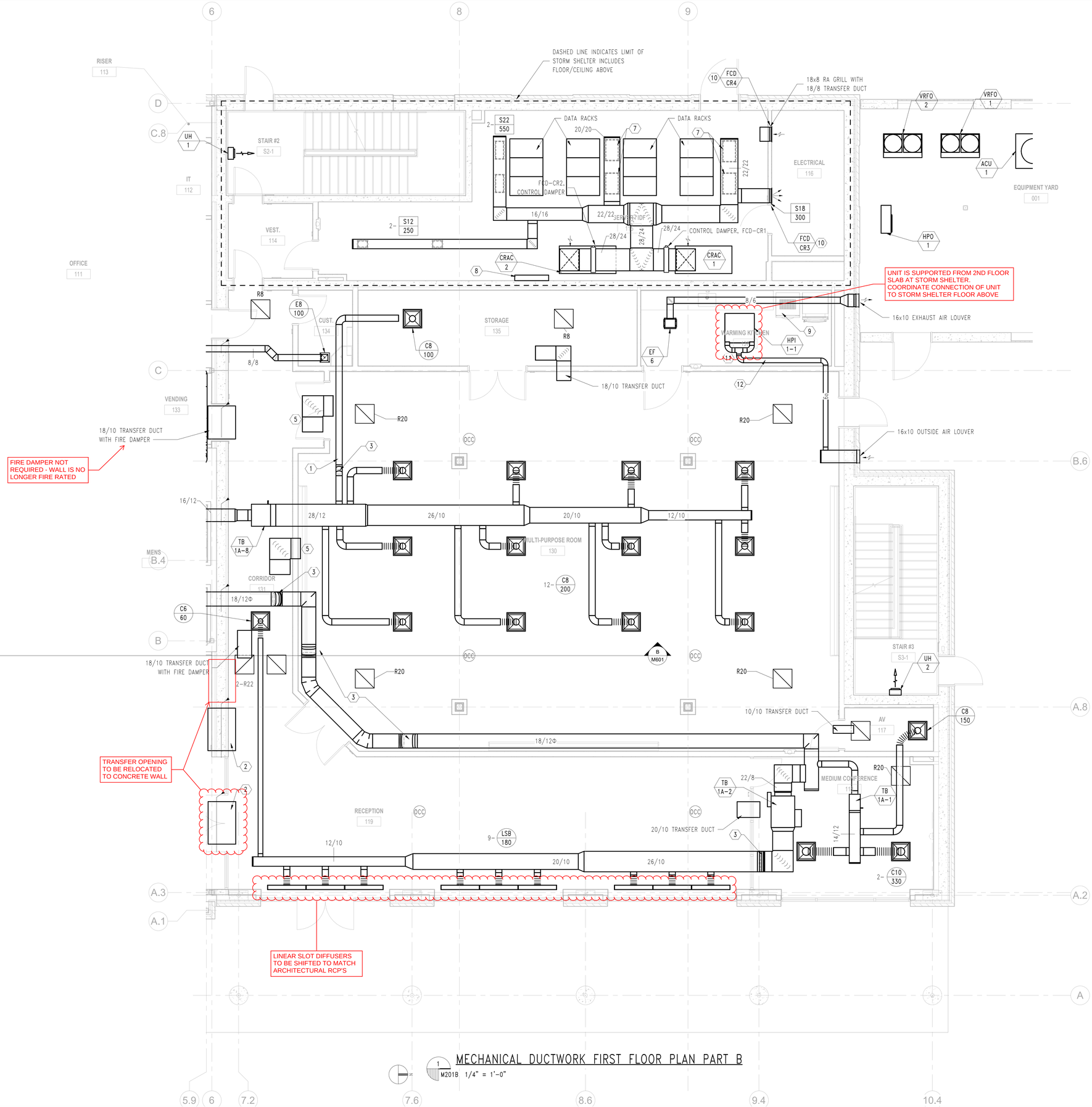

MECHANICAL DUCTWORK FIRST FLOOR PLAN PART B

1 M201B 1/4" = 1'-0"

SHEET NOTES:

1. USE R16 FOR CEILING RETURN GRILLES, UNLESS OTHERWISE INDICATED ON PLANS. SEE DETAIL H/M006

KEYED NOTES:

1. ROUTE SUPPLY DUCT IN BULKHEAD, SEE ARCHITECTURAL FOR MORE DETAIL.
2. TRANSFER DUCT. SEE M201A
3. DUCT OFFSET UP AND DOWN.
4. NOT USED.
5. 26/16 TRANSFER DUCT.
6. 26/16 STORM RESISTANCE INTAKE / DISCHARGE LOUVER.
7. 26X16 SUPPLY GRILLES, 1025 CFM EACH.
8. CONTROL PANEL.
9. PIPE HPI 1-1 CONDENSATE TO FLOOR SINK AT ICE MACHINE.
10. CONTROL DAMPER INTERLOCK WITH CLEAN AGENT FIRE SUPPRESSION.
11. REFER TO MANUFACTURE FOR CEILING CASSETTES FRESH AIR KIT INSTALLATION AND OUTSIDE AIR CONNECTION.
12. 2-POSITION CONTROL DAMPER, INTERLOCK WITH EF-6 (FCD-HP1)

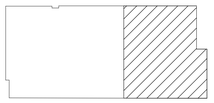

KEY PLAN

SCALE: 1/4" = 1'-0"
0 2' 4' 8'

HHB Engineers, P.C.
CONSULTING ENGINEERS
PRATTVILLE, AL 334/358-2707

ALABAMA LICENSED NO. 13702 PROFESSIONAL ENGINEER THOMAS L. HATTEMER
3/4/20
SHELBY CO.

HWY 280 SHELBY COUNTY SERVICES BUILDING
CONSTRUCTION BID PACKAGE

SHELBY COUNTY DEPARTMENT OF DEVELOPMENT SERVICES
19220 US HWY 280, BIRMINGHAM, AL 35242
19-040.00

ARCHITECT OF RECORD:
WILLIAMS· BLACKSTOCK ARCHITECTS
ARCHITECTURE INTERIORS PLANNING
SUITE 200
2204 FIRST AVENUE SOUTH
BIRMINGHAM, ALABAMA 35233

KEY PLAN:

ISSUE DATE: 03/06/2020

REVISIONS

NO.	DATE	DESCRIPTION

PROJECT NUMBER: 19-040.00

DRAWING TITLE: MECHANICAL DUCTWORK FIRST FLOOR PLAN - PART B

SHEET NUMBER: M201B

3/5/2020 12:02:07 PM

N:\2019jobs\219067\Drawings\MECH\SHELBY COUNTY SERVICES BUILDING

REVIT 2019

3/5/2020 12:02:14 PM

N:\2019jobs\219067\Drawings\MECH\SHELBY COUNTY SERVICES BUILDING

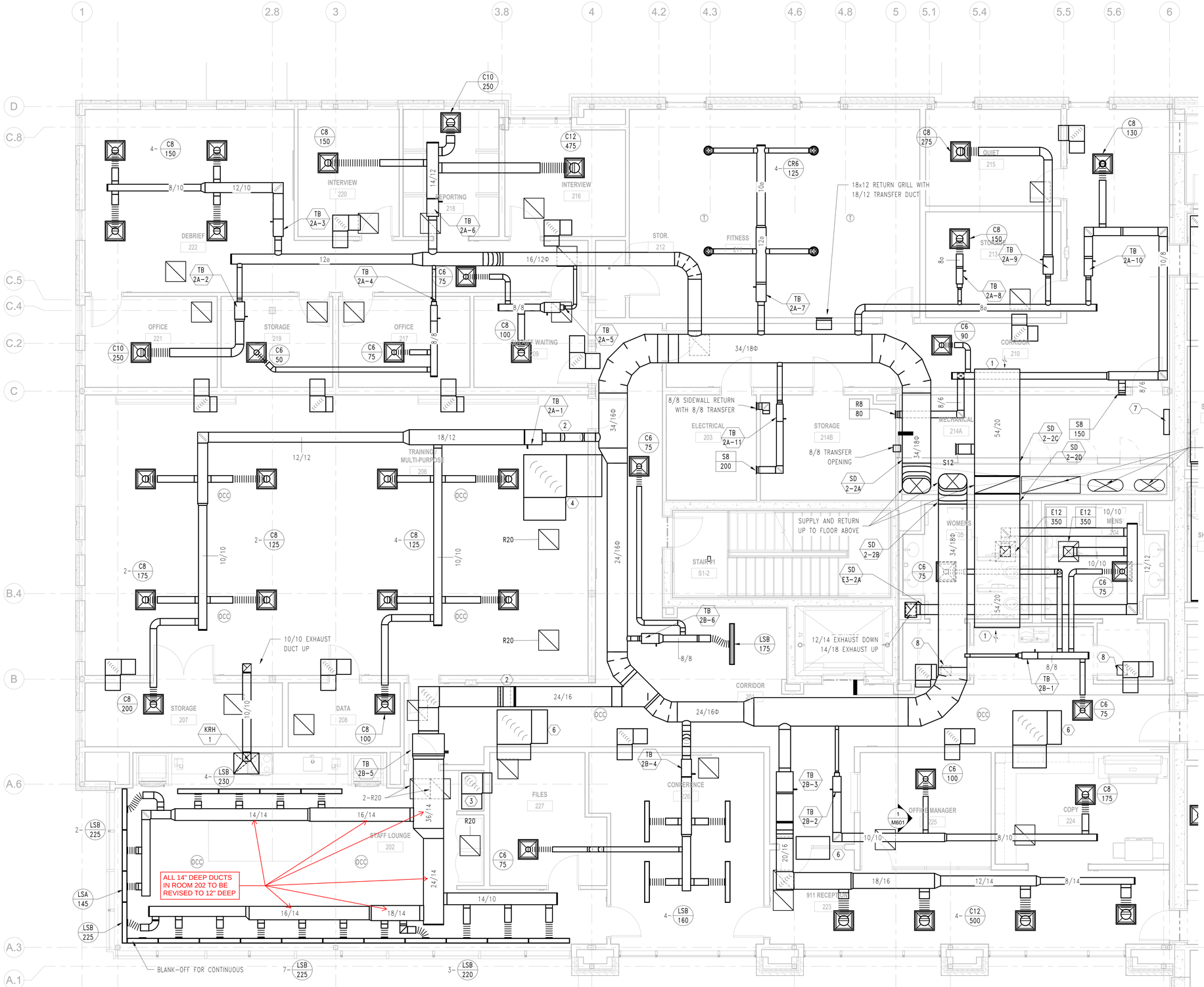

SHEET NOTES:

1. USE R16 FOR ALL RETURN GRILLES, UNLESS OTHERWISE INDICATE ON PLAN
2. USE 18/12 DUCT FOR ALL TRANSFER DUCT. UNLESS OTHER WISE INDICATE ON PLAN.

KEYED NOTES:

1. 50/20 RETURN DUCT OPENING. PROVIDE HARDWARE CLOTH.
2. DUCT OFFSET UP/DOWN.
3. 24/26 TRANSFER DUCT. ROUTE INSIDE BULKHEAD. SEE ARCHITECTURAL FOR MORE DETAIL.
4. 50/16 TRANSFER AIR OPENING.
5. 16/12 TRANSFER DUCT.
6. 40/24 TRANSFER DUCT.
7. CONTROL PANEL FOR SECOND FLOOR.
8. R8 RETURN GRILL WITH 12/12 MODULE SIZE.

MECHANICAL DUCTWORK SECOND FLOOR PLAN PART A

M202A 1/4" = 1'-0"

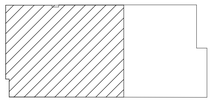

KEY PLAN

SCALE: 1/4" = 1'-0"

0 2' 4' 8'

HHB Engineers, P.C.
CONSULTING ENGINEERS
PRATTVILLE, AL 334/358-2707

ALABAMA LICENSED NO. 13702 PROFESSIONAL ENGINEER THOMAS L. HATTEMER 3/4/20

HWY 280 SHELBY COUNTY SERVICES BUILDING
CONSTRUCTION BID PACKAGE

SHELBY COUNTY DEPARTMENT OF DEVELOPMENT SERVICES
19220 US HWY 280, BIRMINGHAM, AL 35242
19-040.00

ARCHITECT OF RECORD:
WILLIAMS· BLACKSTOCK ARCHITECTS
ARCHITECTURE INTERIORS PLANNING
SUITE 200
2204 FIRST AVENUE SOUTH
BIRMINGHAM, ALABAMA 35233

KEY PLAN:

ISSUE DATE: 03/06/2020

REVISIONS

NO.	DATE	DESCRIPTION

PROJECT NUMBER: 19-040.00

DRAWING TITLE: MECHANICAL DUCTWORK SECOND FLOOR PLAN - PART A

SHEET NUMBER: M202A

REVIT 2019

3/5/2020 12:02:28 PM

N:\2019jobs\219067\Drawings\MECH\SHELBY COUNTY SERVICES BUILDING

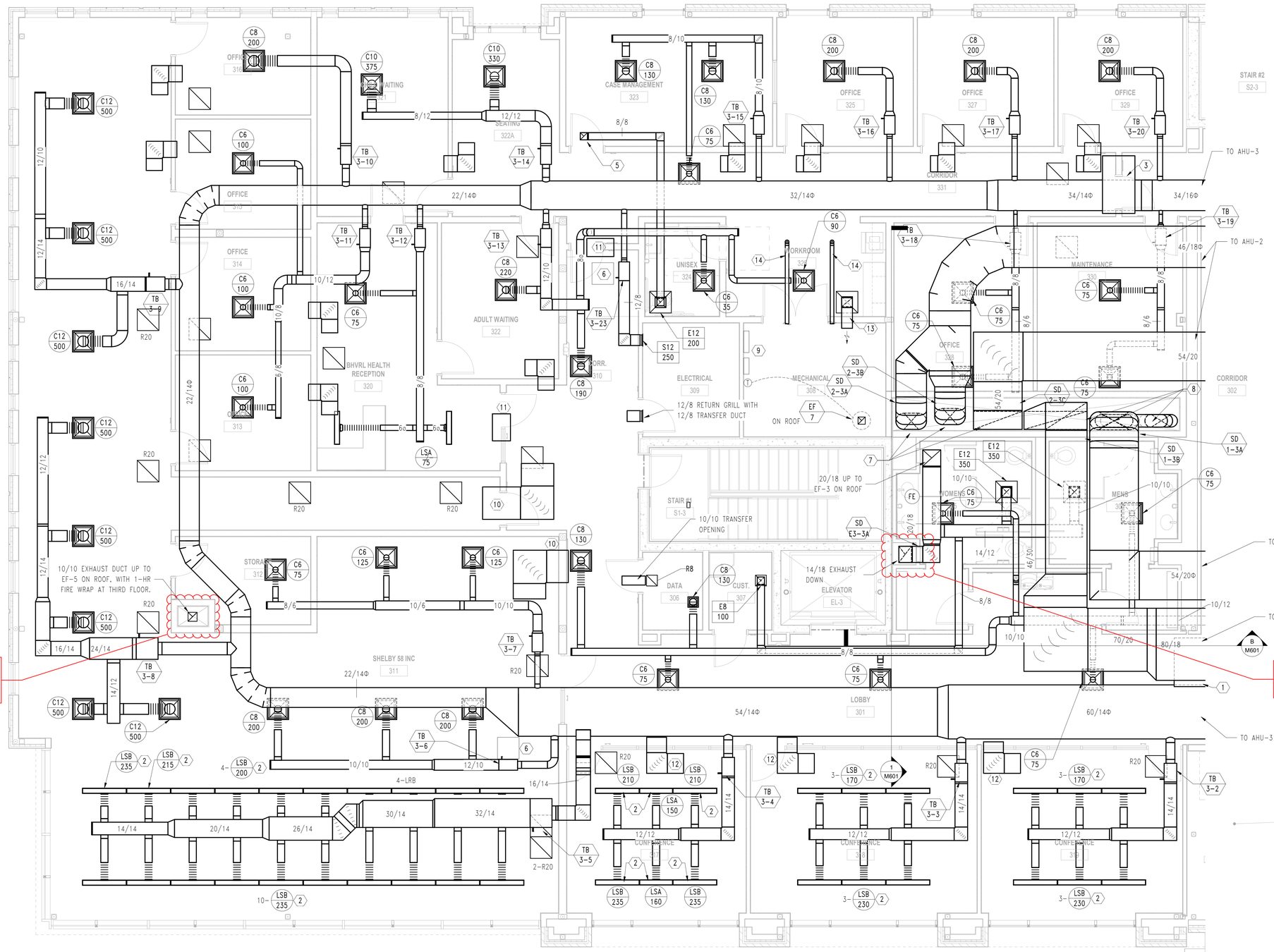

SHEET NOTES:

1. USE R16 FOR ALL RETURN GRILLES, UNLESS OTHERWISE INDICATE ON PLAN
2. USE 18/12 DUCT FOR ALL TRANSFER DUCT. UNLESS OTHER WISE INDICATE ON PLAN.

KEYED NOTES:

1. 54x26 TRANSFER AIR OPENING
2. PROVIDE EXTENDED HEIGHT LINEAR SLOT PLENUM.
3. 64x14 TRANSFER AIR OPENING
4. 24x18 OA UP TO INTAKE PENTHOUSE IV-OA
5. 8/8 UP TP EF-1 ON ROOF
6. CEILING ACCESS PANELS, SEE ARCH.
7. TWO 34/18 SUPPLY DUCT AND 54/20 RETURN DUCT DOWN TO 2ND FLOOR.
8. 42/14 AND 36/14 SUPPLY DUCT, 70/20 RETURN DUCT DOWN TO 1ST FLOOR.
9. HVAC CONTROL PANELS FOR BOILERS, AHU-1 AND AHU-2, AHU-3
10. 36/20 TRANSFER AIR OPENING.
11. 30/16 TRANSFER DUCT OPENING.
12. 22/14 TRANSFER DUCT OPENING.
13. 12/10 TRANSFER AIR DUCT WITH 12/12 NECK RAR.
14. BOILER COMBUSTION AIR INTAKE DUCTS WITH EXTERIOR DUCT WRAP INSULATION. OFFSET TO DISTANCE FROM BOILER VENT RECOMMENDED BY MANUFACTURER, SEE 3/M401 FOR CONTINUATION.

MECHANICAL DUCTWORK THIRD FLOOR – PART A

1 / M203A 1/4" = 1'-0"

KEY PLAN

SCALE: 1/4" = 1'-0"

0 2' 4' 8'

HHB Engineers, P.C.
CONSULTING ENGINEERS
PRATTVILLE, AL 334/358-2707

ALABAMA LICENSED NO. 13702 PROFESSIONAL ENGINEER THOMAS L. HATTEMER
3/4/19

HWY 280 SHELBY COUNTY SERVICES BUILDING
CONSTRUCTION BID PACKAGE

SHELBY COUNTY DEPARTMENT OF DEVELOPMENT SERVICES
19220 US HWY 280, BIRMINGHAM, AL 35242
19-040.00

ARCHITECT OF RECORD:
WILLIAMS· BLACKSTOCK
ARCHITECTS
ARCHITECTURE INTERIORS PLANNING
SUITE 200
2204 FIRST AVENUE SOUTH
BIRMINGHAM, ALABAMA 35233

KEY PLAN:

ISSUE DATE:
03/06/2020

REVISIONS

NO.	DATE	DESCRIPTION

PROJECT NUMBER:
19-040.00

DRAWING TITLE:
MECHANICAL DUCTWORK THIRD FLOOR PLAN - PART A

SHEET NUMBER:
M203A

REVIT 2019

PROJECT NOTES:

1. ALL MATERIALS THAT ARE LOCATED IN THE HVAC RETURN CEILING PLENUM MUST BE NON-COMBUSTIBLE, LISTED AND LABELED HAVING A FLAME SPREAD INDEX OF NOT MORE THAN 25 AND A SMOKE-DEVELOPED INDEX OF NOT MORE THAN 50 WHEN TESTED IN ACCORDANCE WITH ASTM E 84 OR UL 723.
2. ALL CONDUITS INTO THE STORM SHELTER AREA SHALL BE THROUGH FLOOR. IF ANY PENETRATIONS ARE REQUIRED THROUGH WALL AND CEILING. THEY SHALL BE LESS THAN 2" IN DIAMETER. ANY WALL AND CEILING PENETRATIONS LARGER THAN 2" DIAMETER SHALL CONFORM WITH ICC 500.
3. ALL CONDUITS PENETRATING THE BUILDING ENVELOPE SHALL BE ROUTED UNDERGROUND. NO OPENINGS WILL BE ALLOWED IN BUNKER WALLS TO FACILITATE PASSAGE OF CONDUITS OR WIRES.

Gunn & Associates, P.C.
Consulting Engineers
3102 Highway 14
Millbrook, AL 36054
Tel: 334.285.1273
1200 Providence Park, Ste. 200
Birmingham, AL 35242
GA#19-238

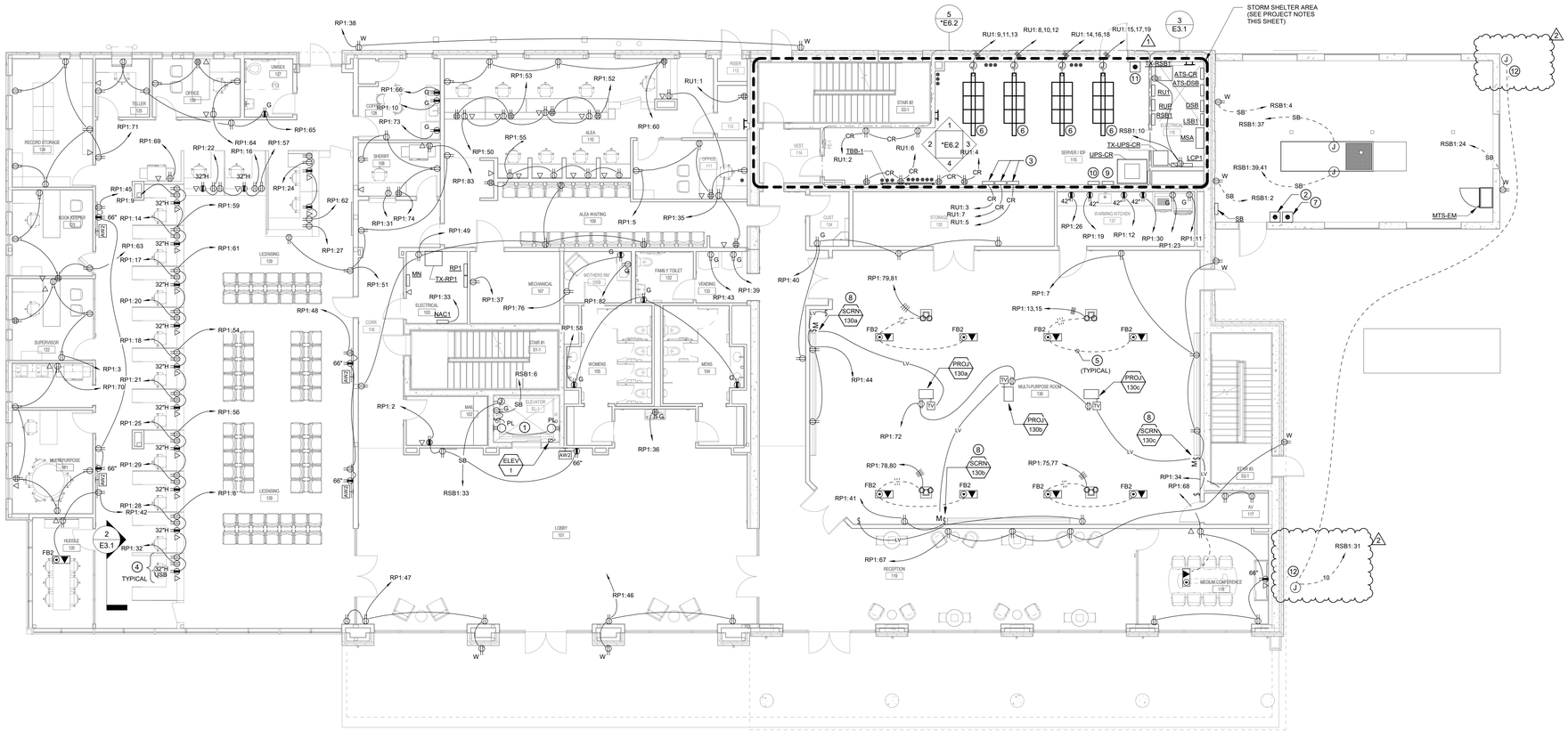

1 E3.1 FIRST FLOOR PLAN - POWER
1/8" = 1'-0"

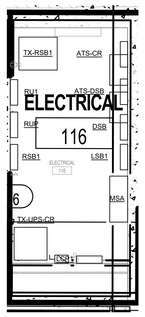

3 E3.1 FIRST FLOOR PLAN - ENLARGED ELEC. ROOM 116
1/4" = 1'-0"

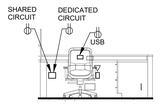

2 E3.1 DESK UNIT POWER DETAIL
1/4" = 1'-0"

SHEET NOTES:

1. EXTEND 120V UNSWITCHED CIRCUIT TO PIT LIGHTS. GFCI SHALL NOT CONTROL LIGHTING.
2. EMERGENCY SHUTDOWN BUTTON FOR GENERATOR. COORDINATE LOCATION WITH OWNER.
3. ACCESS CONTROL PANELS, 120V.
4. DESK UNIT POWER. PROVIDE DUPLEX RECEPTACLE WITH USB, MOUNTED HORIZONTALLY ABOVE COUNTER. PROVIDE TWO DUPLEX OUTLETS IN QUAD COVER AT EACH DESK. LEFT DUPLEX ON SHARED CIRCUIT, RIGHT DUPLEX ON DEDICATED CIRCUIT. SEE DETAIL THIS SHEET
5. COORDINATE ALL SUB-FLOOR CONDUIT WITH FOOTER LOCATIONS.
6. PROVIDE STARLINE T2 SERIES POWER BUS ABOVE EACH SERVER RACK LOCATION.
7. STM, PUSHBUTTON WITH SIGNAGE. SEE POWER RISER.
8. PROJECTOR MOTORIZED SCREEN, 120V CONNECTION ABOVE CEILING. PROVIDE 3/4" C FROM MOTOR TO SINGLE GANG J-BOX LOCATED BY OWNER FOR UP/DOWN SWITCH AND 3/4" EC FROM MOTOR CONTOLS TO PROJECTOR.
9. MTS-UPS-INPUT, SEE E7.1
10. MTS-UPS-OUTPUT, SEE E7.1
11. STM, PUSHBUTTON FOR UPS SHUTDOWN. SEE POWER RISER.
12. ELECTRIC DOOR/GATE LOCK, 120V, 250W.

HWY 280 SHELBY COUNTY SERVICES BUILDING
CONSTRUCTION BID PACKAGE
SHELBY COUNTY DEPARTMENT OF DEVELOPMENT SERVICES
19220 US HWY 280, BIRMINGHAM, AL 35242
19-040.00

ARCHITECT OF RECORD :
WILLIAMS· BLACKSTOCK
ARCHITECTS
ARCHITECTURE INTERIORS PLANNING
SUITE 200
2204 FIRST AVENUE SOUTH
BIRMINGHAM, ALABAMA 35233

KEY PLAN :

ISSUE DATE:
03/06/2020

REVISIONS

NO.	DATE	DESCRIPTION
1	03/13/20	ADDENDUM #001
2	03/20/20	ADDENDUM #002

PROJECT NUMBER:
19-040.00

DRAWING TITLE:
FIRST FLOOR PLAN - POWER

SHEET NUMBER:
E3.1

PROJECT NOTES:

1. ALL MATERIALS THAT ARE LOCATED IN THE HVAC RETURN CEILING PLENUM MUST BE NON-COMBUSTIBLE, LISTED AND LABELED HAVING A FLAME SPREAD INDEX OF NOT MORE THAN 25 AND A SMOKE-DEVELOPED INDEX OF NOT MORE THAN 50 WHEN TESTED IN ACCORDANCE WITH ASTM E 84 OR UL 723.
2. ALL CONDUITS INTO THE STORM SHELTER AREA SHALL BE THROUGH FLOOR. IF ANY PENETRATIONS ARE REQUIRED THROUGH WALL AND CEILING. THEY SHALL BE LESS THAN 2" IN DIAMETER. ANY WALL AND CEILING PENETRATIONS LARGER THAN 2" DIAMETER SHALL CONFORM WITH ICC 500.
3. ALL CONDUITS PENETRATING THE BUILDING ENVELOPE SHALL BE ROUTED UNDERGROUND. NO OPENINGS WILL BE ALLOWED IN BUNKER WALLS TO FACILITATE PASSAGE OF CONDUITS OR WIRES.

Gunn & Associates, P.C.
Consulting Engineers
3102 Highway 14
Millbrook, AL 36054
Tel: 334.285.1273
1200 Providence Park, Ste. 200
Birmingham, AL 35242
GA#19-238

Charles M. Brewer
LICENSED
No. 37959
PROFESSIONAL
03-06-2020
ENGINEER
CHARLES M. BREWER

SHEET NOTES:

1. PROVIDE ROUGH-IN FOR DOOR TYPE "1" PER DETAIL 1/E6.9. COORDINATE WITH DOOR INSTALLER FOR LOCATION OF ALL JUNCTION BOXES AND DEVICES TO BE INSTALLED. PROVIDE CABLING AS REQUIRED TO CONNECT DOOR TO POWER AND CONTROL.
2. PROVIDE ROUGH-IN FOR DOOR TYPE "2" PER DETAIL 2/E6.9. COORDINATE WITH DOOR INSTALLER FOR LOCATION OF ALL JUNCTION BOXES AND DEVICES TO BE INSTALLED. PROVIDE CABLING AS REQUIRED TO CONNECT DOOR TO POWER AND CONTROL.
3. PROVIDE CCTV CAMERA IN THIS LOCATION. PROVIDE AND INSTALL CAMERA IN THIS LOCATION TO VIEW ENTIRE AREA. COORDINATE WITH OWNER PRIOR TO CAMERA SELECTION TO ENSURE AREA MONITORED IS ACCEPTABLE TO OWNER. CAMERA TO BE SELECTED BASED ON OWNER'S REQUIREMENTS.

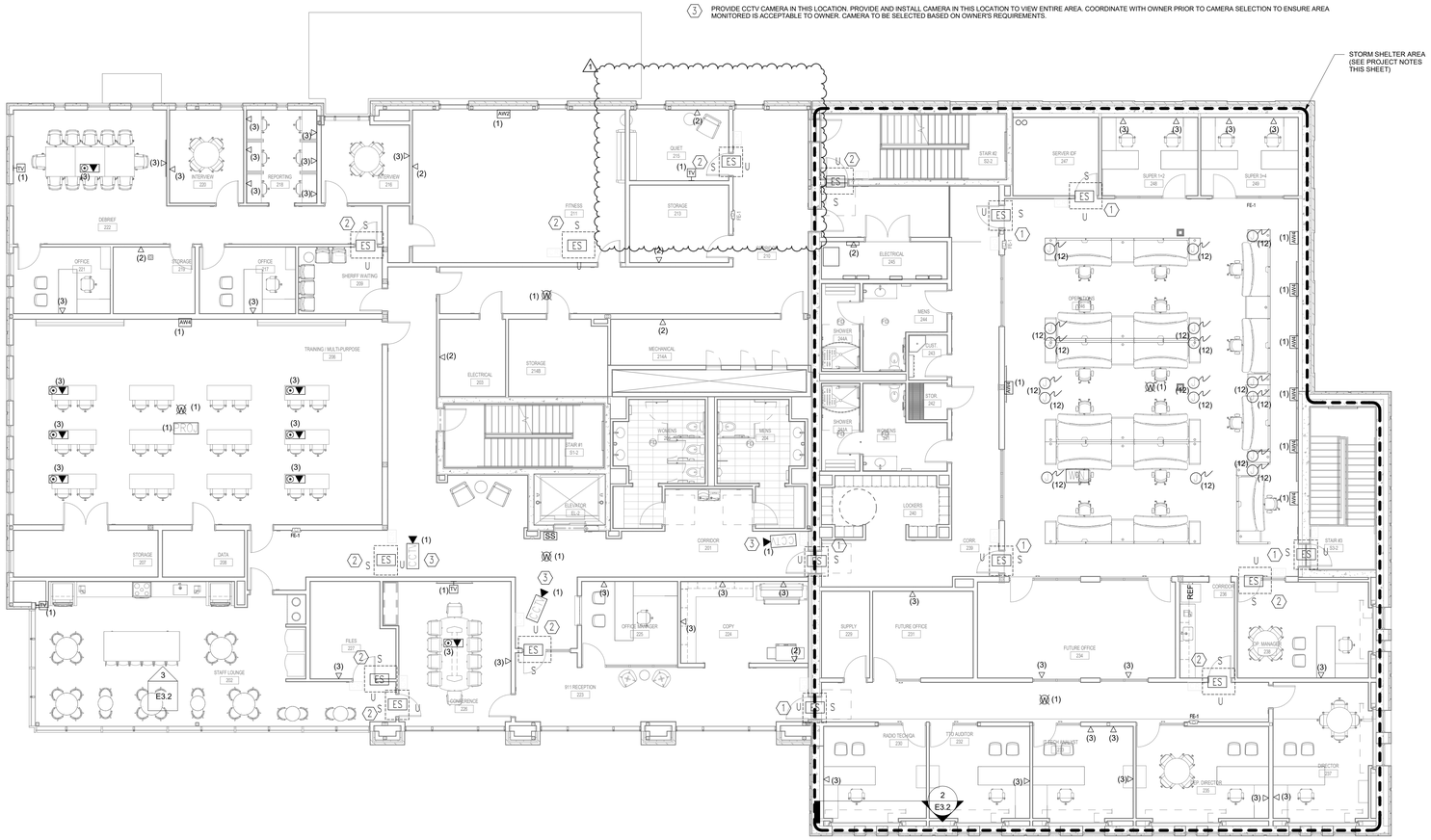

GENERAL AUXILIARY NOTES:

1. PROVIDE J-HOOKS ABOVE CEILING THROUGHOUT ALL CORRIDORS AND HALLWAYS. MAXIMUM 4'-0" SPACING BETWEEN HOOKS.
2. COORDINATE DOOR ROUGH-IN REQUIREMENTS WITH CORRESPONDING TAGS ON DOOR DETAILS, E9.00

N

1 / E4.5 SECOND FLOOR PLAN - AUXILIARY
1/8" = 1'-0"

HWY 280 SHELBY COUNTY SERVICES BUILDING
CONSTRUCTION BID PACKAGE
SHELBY COUNTY DEPARTMENT OF DEVELOPMENT SERVICES
19220 US HWY 280, BIRMINGHAM, AL 35242
19-040.00

ARCHITECT OF RECORD :
WILLIAMS· BLACKSTOCK
ARCHITECTS
ARCHITECTURE INTERIORS PLANNING
SUITE 200
2204 FIRST AVENUE SOUTH
BIRMINGHAM, ALABAMA 35233

KEY PLAN :

ISSUE DATE:
03/06/2020

REVISIONS

NO.	DATE	DESCRIPTION
1	03/20/20	ADDENDUM #002

PROJECT NUMBER:
19-040.00

DRAWING TITLE:
SECOND FLOOR PLAN - AUXILIARY

SHEET NUMBER:
E4.5